Assembly instructions
Instructiuni de montaj

PRODUCT : LIVING JAZZ
PRODUS: BIBL JAZZ

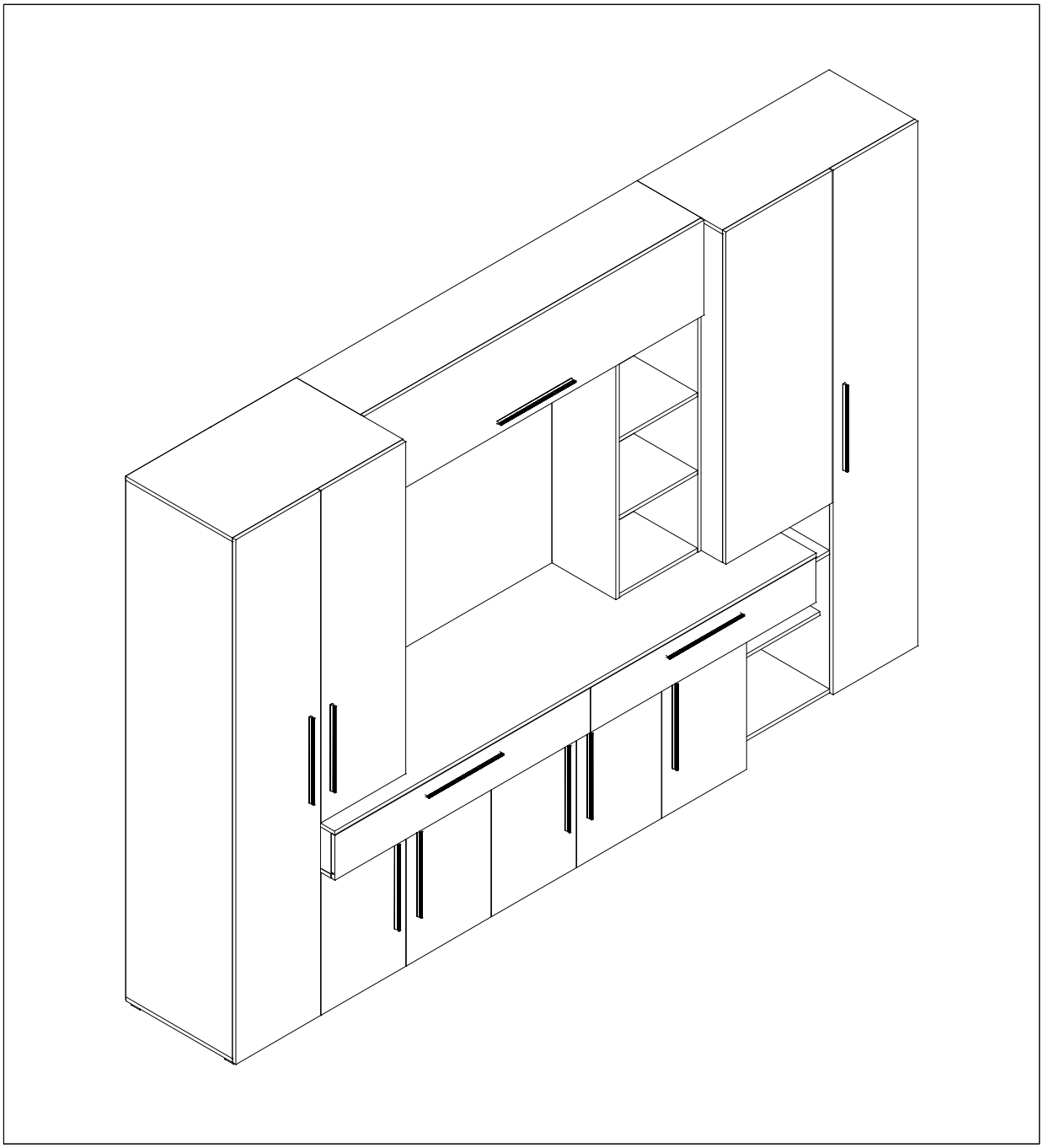

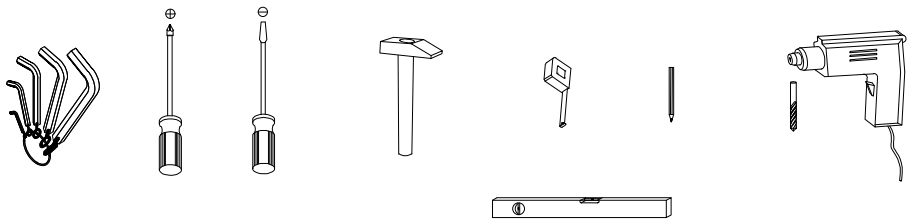

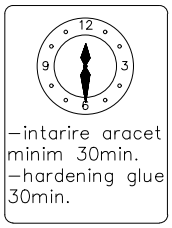

ENG Dear customer,

– As a furniture producer we would like to inform you that a wall fixing furniture can be good only if the connection between fixing material (plugs) and the wall is better. For the suspended items check the wall and use only apropriate type of dowels (brick, BCA, plasterboard,etc.) purchased from a specialty store.
–Assembler is ultimately responsible for a fixed wall. Installation and laying of electrical items will be made only by qualified personnel and
authorized.
– Follow the description and specification of Charge assembly instructions – in case overload that may occur due to children playing, because people, material or due to other factors – we assume no liability as a manufacturer of furniture.
–O perfect functionality of the furniture is assured only if the settlement this adjusts the horizontal and vertical. Only after that will adjust the doors.
– All screws and removable connection elements will be checked and tightened after 5 to 6 weeks to ensure safety o final fixation.
– Do not use abrasive cleansers
– If not follow the instructions on the use, maintenance or installation, if the products or changes, if changes or used parts that do not meet original pieces, then lose any warranty or claim responsibility of the manufacturer of furniture.

Incarcari maxime pentru polite in Kg: Maximum weight in Kg Shelf							
Grosime PAL melaminat / Thick chipboard							Sticla / Glass
Lungime / Length	mm	16	18	22	25	28	5 / 6/ 8
0 ≤ 400		8 kg	8 kg	8 kg	10 kg	10 kg	Lungime / Length >600=5Kg.
401 ≤ 600		6 kg	6 kg	6 kg	6 kg	6 kg	
601 ≤ 800		5 kg	5 kg	5 kg	5 kg	5 kg	Lungime / Length >1000=2Kg.
801 ≤ 1000		3 kg	3 kg	3 kg	3 kg	3 kg	

RO Stimate client,

In calitate de producator de mobila am dori sa va informam ca o fixare a mobilei de perete poate fi buna doar daca legatura dintre materialul de fixare (dibluri) si perete este buna. In cazul corpurilor suspendate verificati peretele si folositi doar dibluri corspunzatoare tipului de perete (caramida, BCA, rigips,etc.) achizitionate dintr–un magazin de specialitate. In definitiv montatorul este raspunzator de fixarea de perete.
– Montarea si pozarea articolelor electrice se va efectua doar de catre personal calificat si autorizat.
– Respectati descrierea si specificatiile de incarcare din instructiunile de montaj – in caz de supraincarcare ce poate sa apara datorita copiilor care se joaca, datorita persoanelor, materialului sau datorita altor factori – nu ne asumam nici o raspundere ca producator de mobila.
– O functionalitate perfecta a mobilei este asigurata doar in cazul in care la asezare, aceasta se regleaza pe orizontala si verticala. Doar dupa aceasta se vor regla usile.
– Toate suruburile si elementele de imbinare demontabila vor trebui verificate si stranse dupa 5 pana la 6 saptamani pentru a se asigura o siguranta definitiva a fixarii.
– Nu folositi agenti de curatire abrazivi
– In cazul in care nu se respecta instructiunile de utilizare, de deservire sau de montaj, daca se efectueaza modificari ale produselor, daca se schimba piese sau se folosesc piese care nu corespund pieselor originale, atunci se pierde orice garantie sau pretentie de responsabilitate din partea producatorului de mobila.

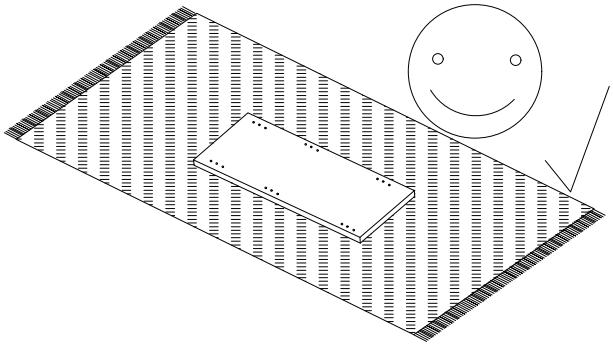

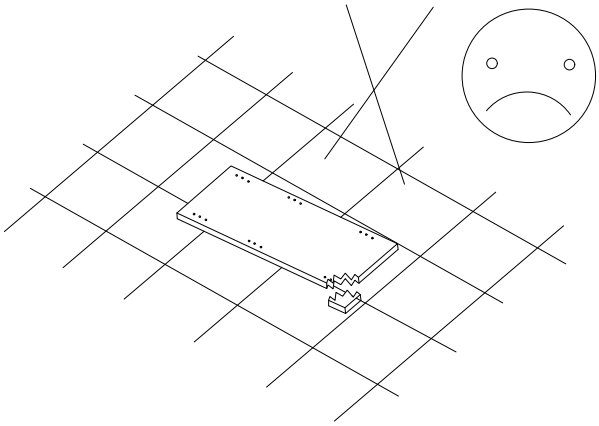

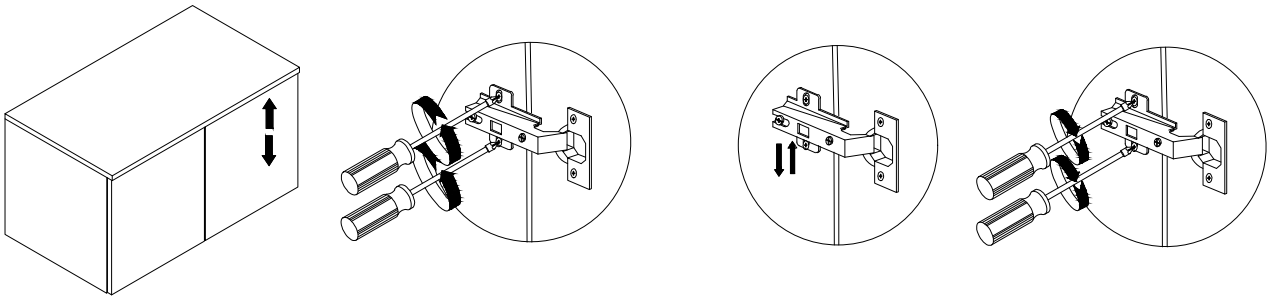

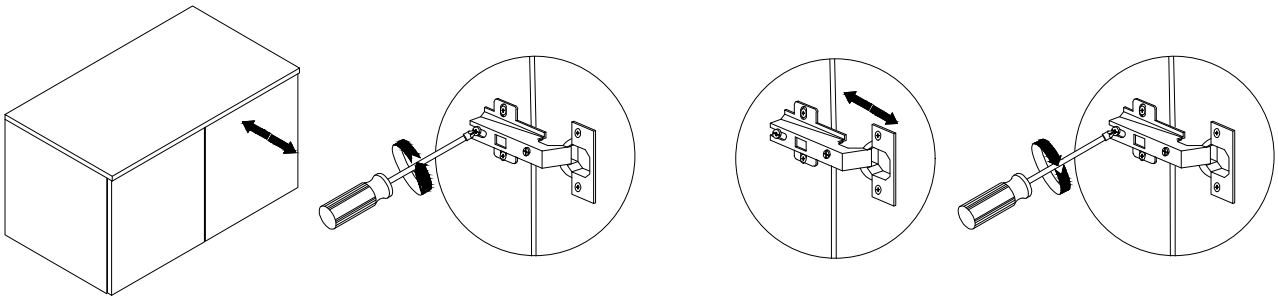

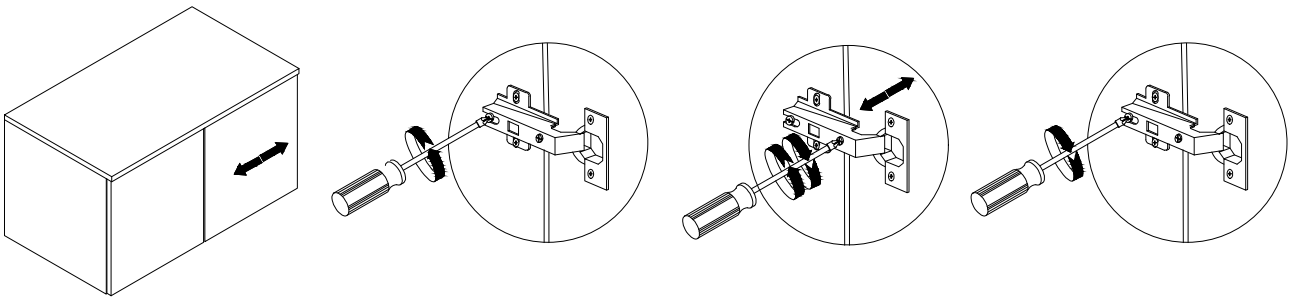

D−001	D−002	B−01	B−02
DRW−450	D−005	PI−60N	T−01
PI−03	S−001	SBH	BHOV
S1−16 ø3.5x16	E−50	SC	H
P−02	HEX	AR	M−02

Caracteristici tehnice produs

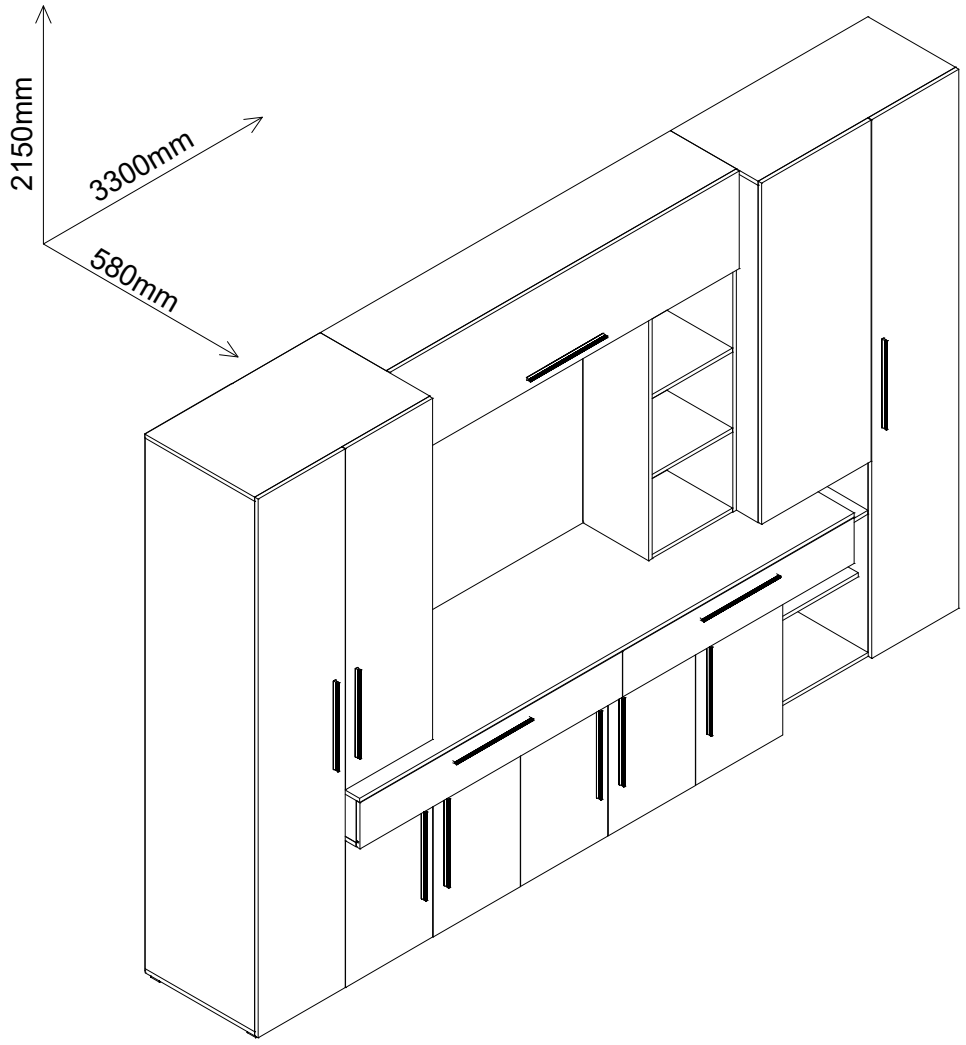

Materiale:
- Placi din aschii de lemn (PAL), meleminate de grosime = 16 mm
- Placi din fibre de lemn de inalta densitate (HDF) de grosime = 3 mm
- Fronturi PAL
- Manere material plastic
- Cant ABS 0.5 mm
- Cant ABS 1.0 mm
- Balamale metalice
- Glisiere metalice
- Elemente de imbinare metalice
- Picioare baza plastic
- Bara haine inox

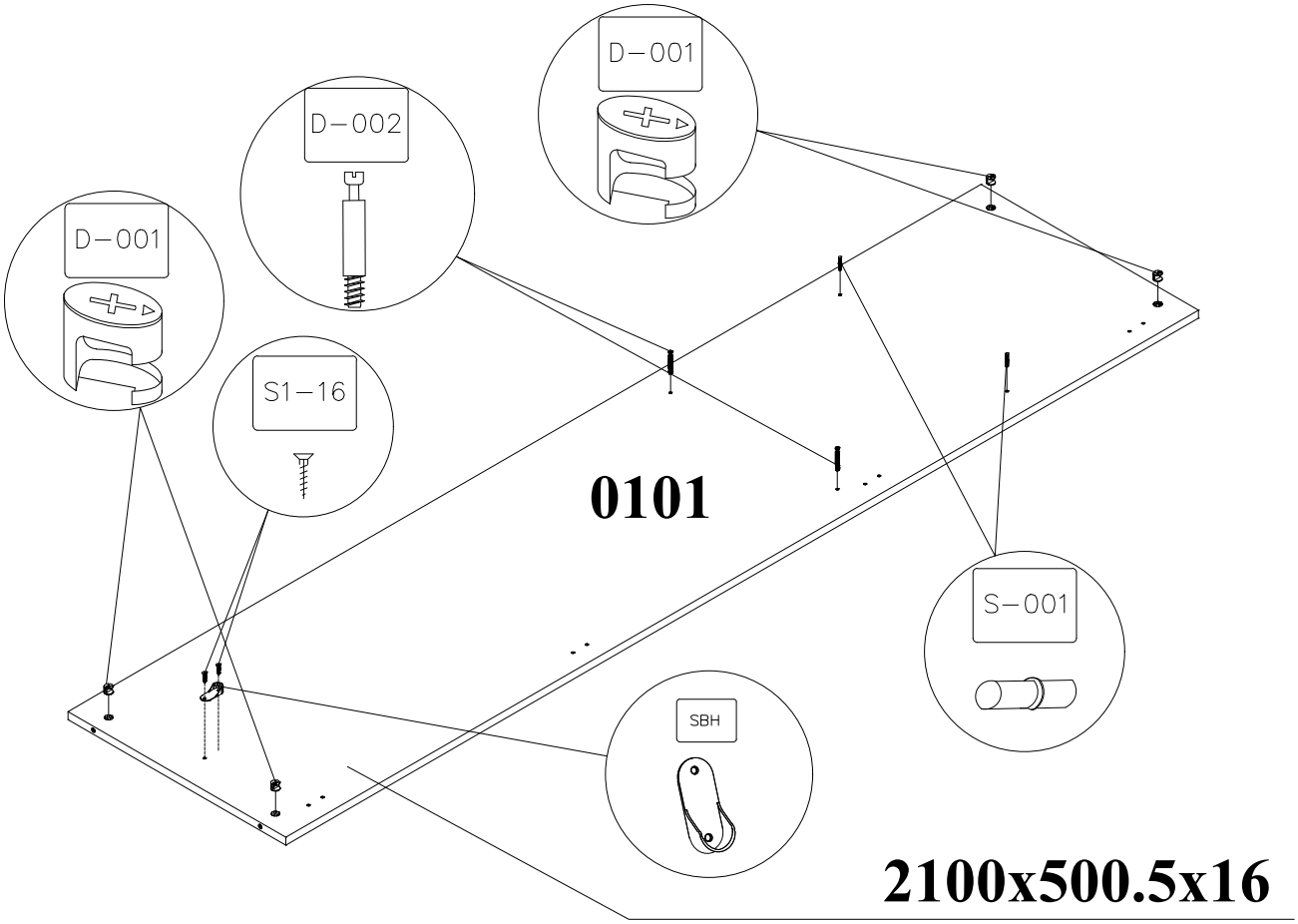
D−001
D−002
D−001
S1−16
0101
S−001
SBH
2100x500.5x16

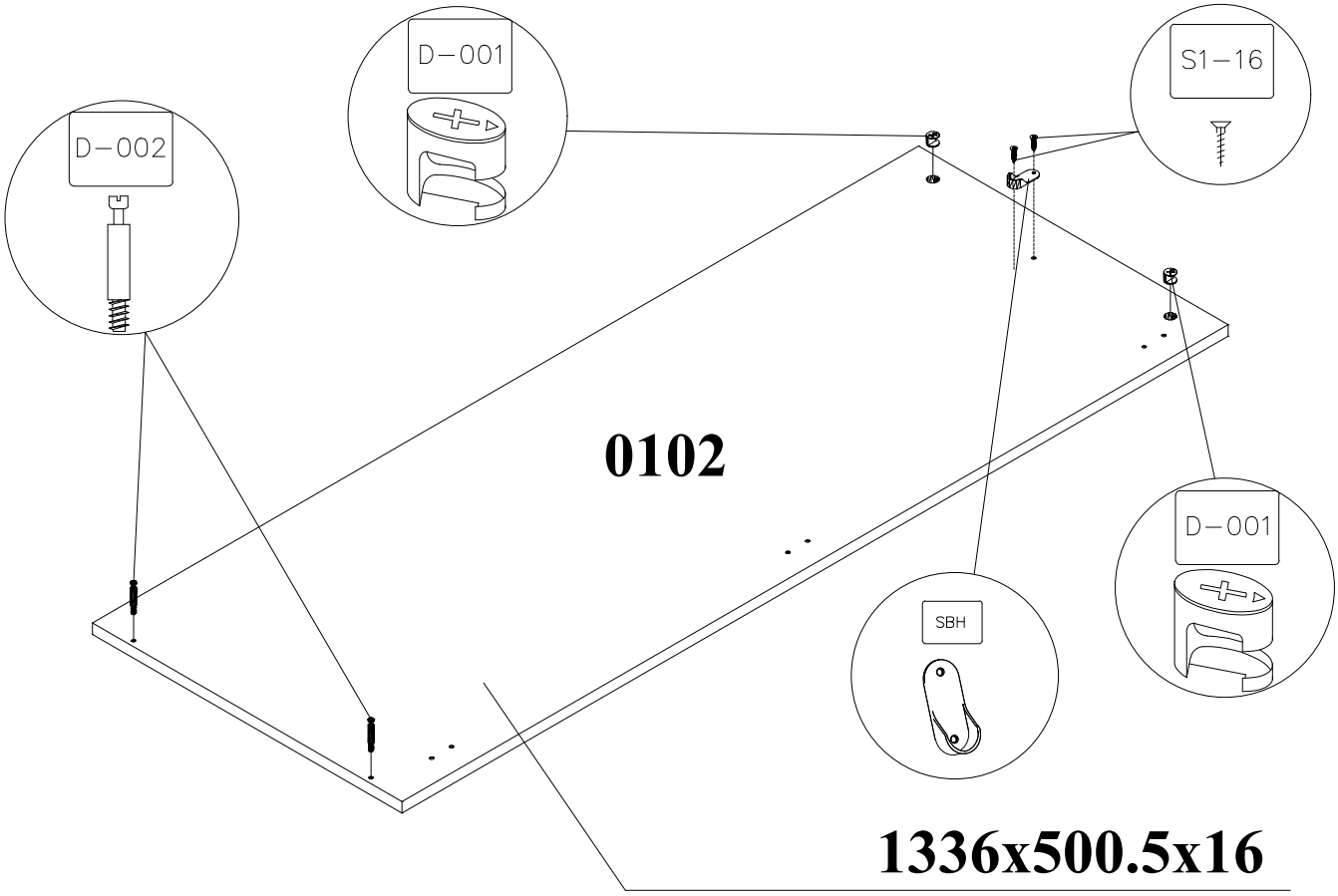
D−001
S1−16
D−002
0102
D−001
SBH
1336x500.5x16

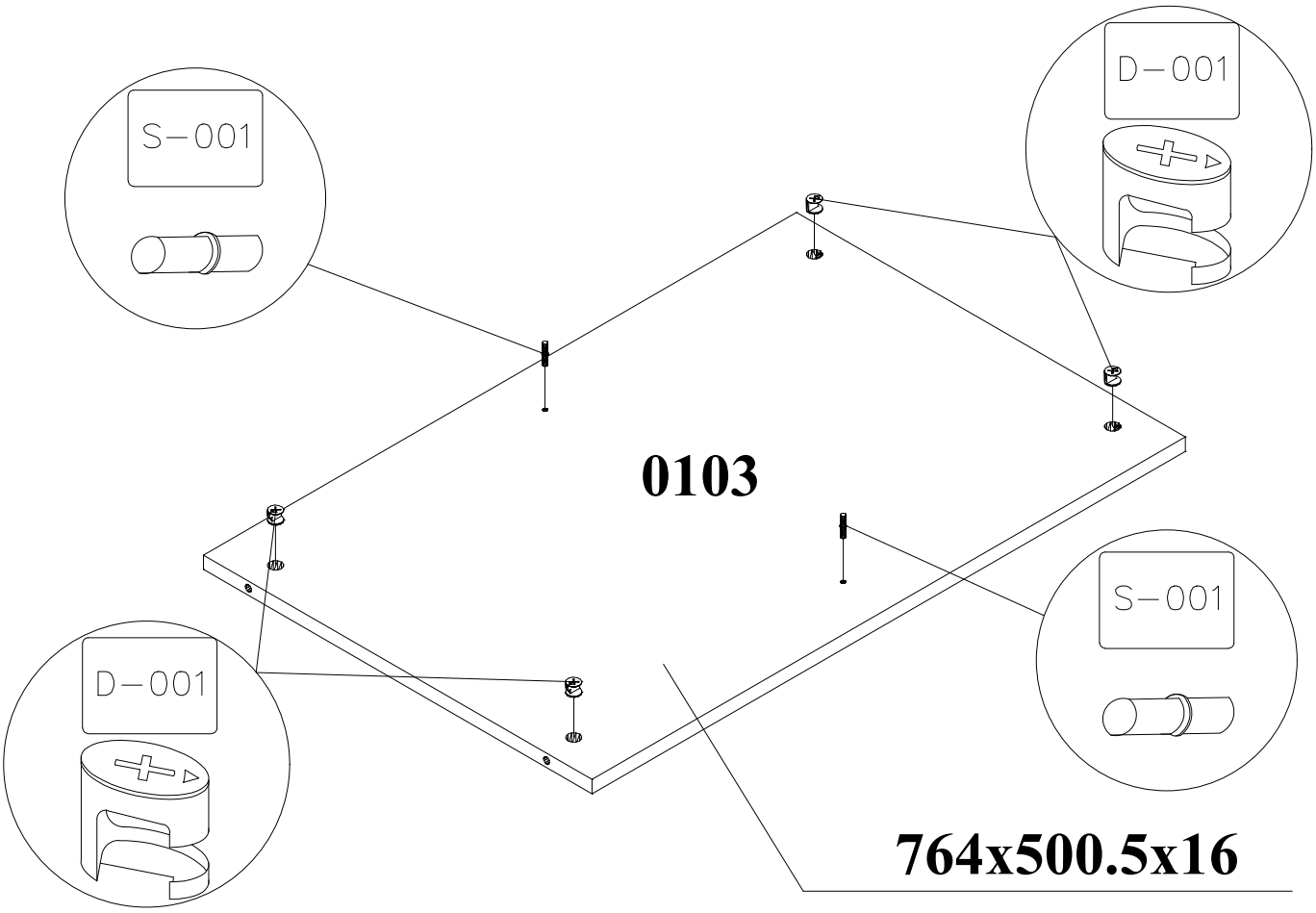
S-001
D-001
0103
D-001
S-001
764x500.5x16

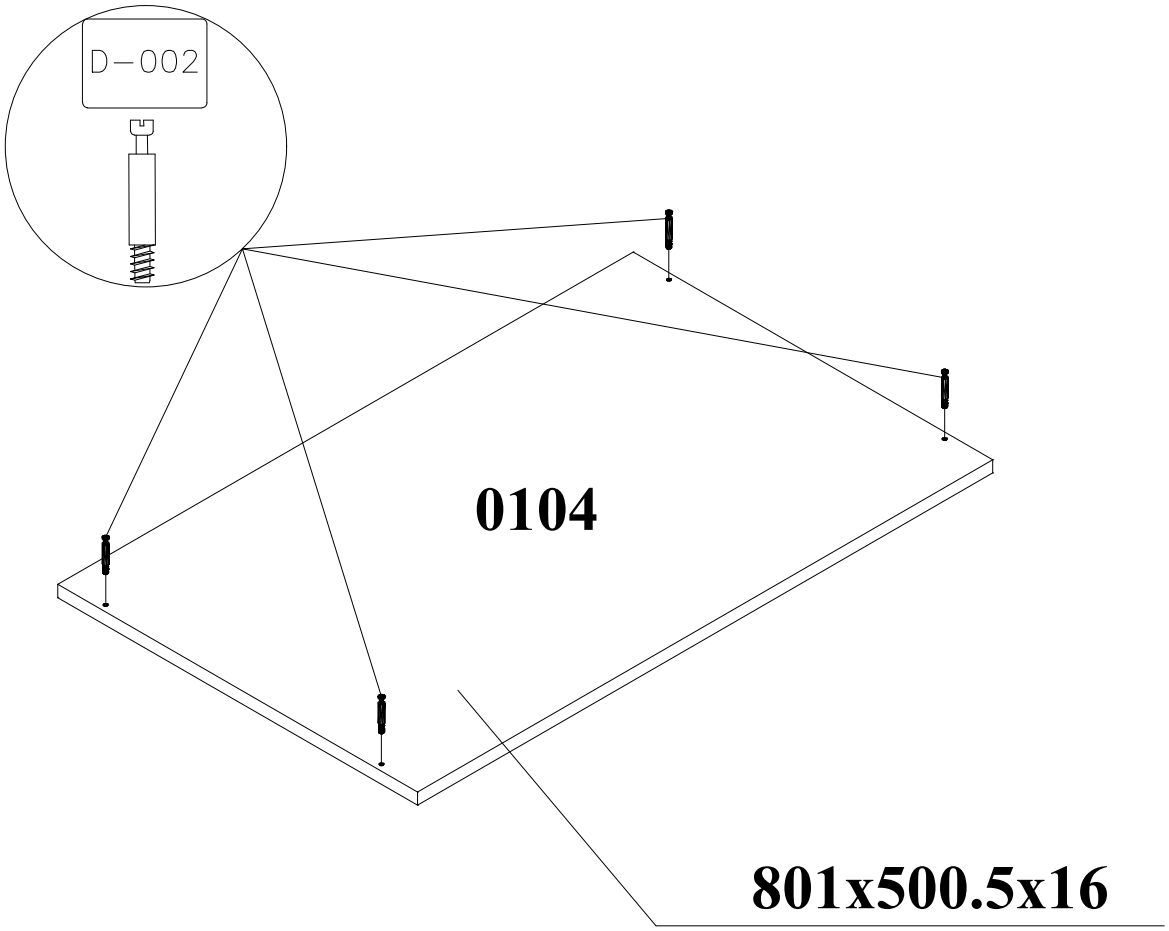
D-002
0104
801x500.5x16

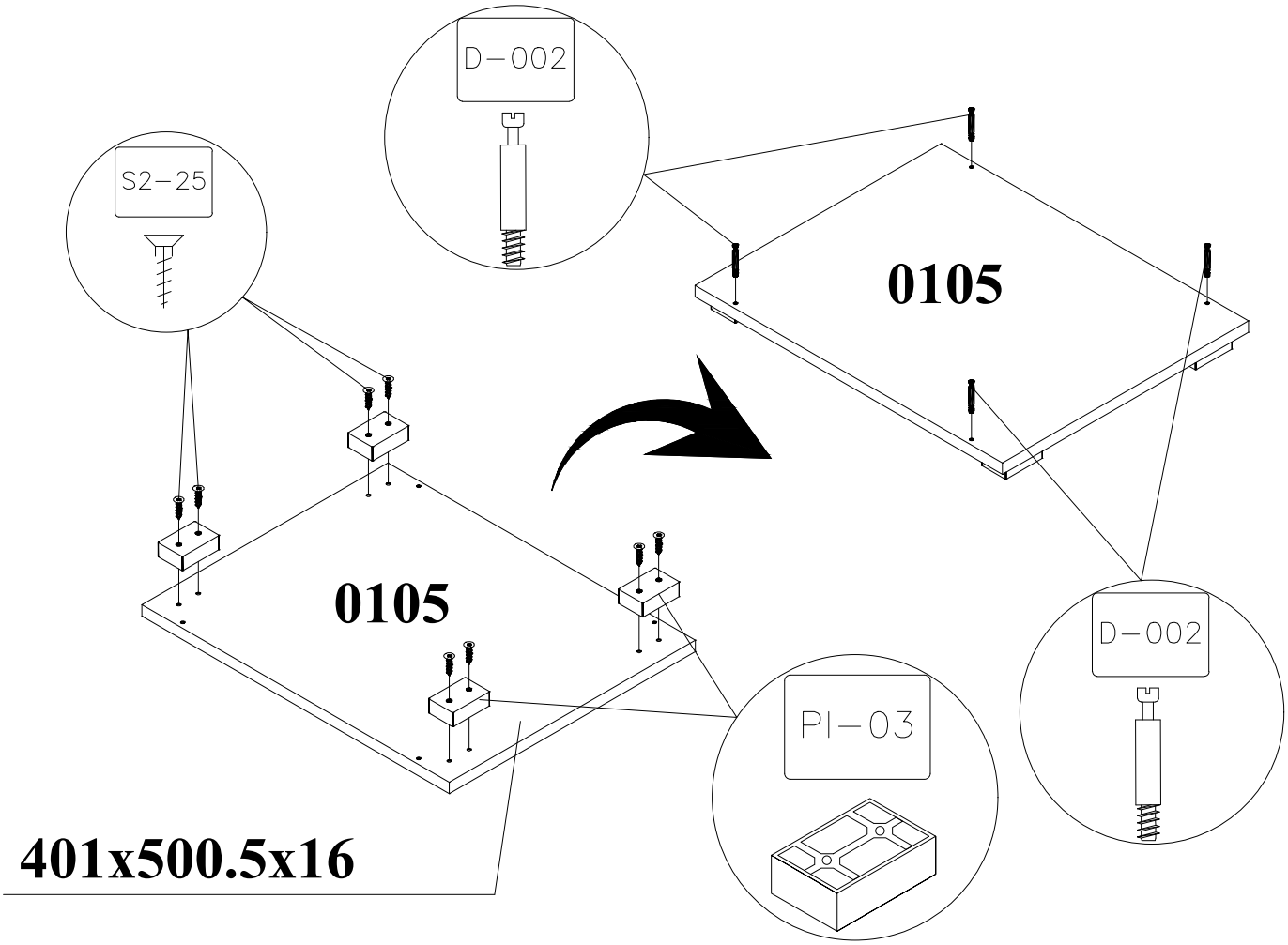
D-002
S2-25
0105
0105
D-002
PI-03
401x500.5x16

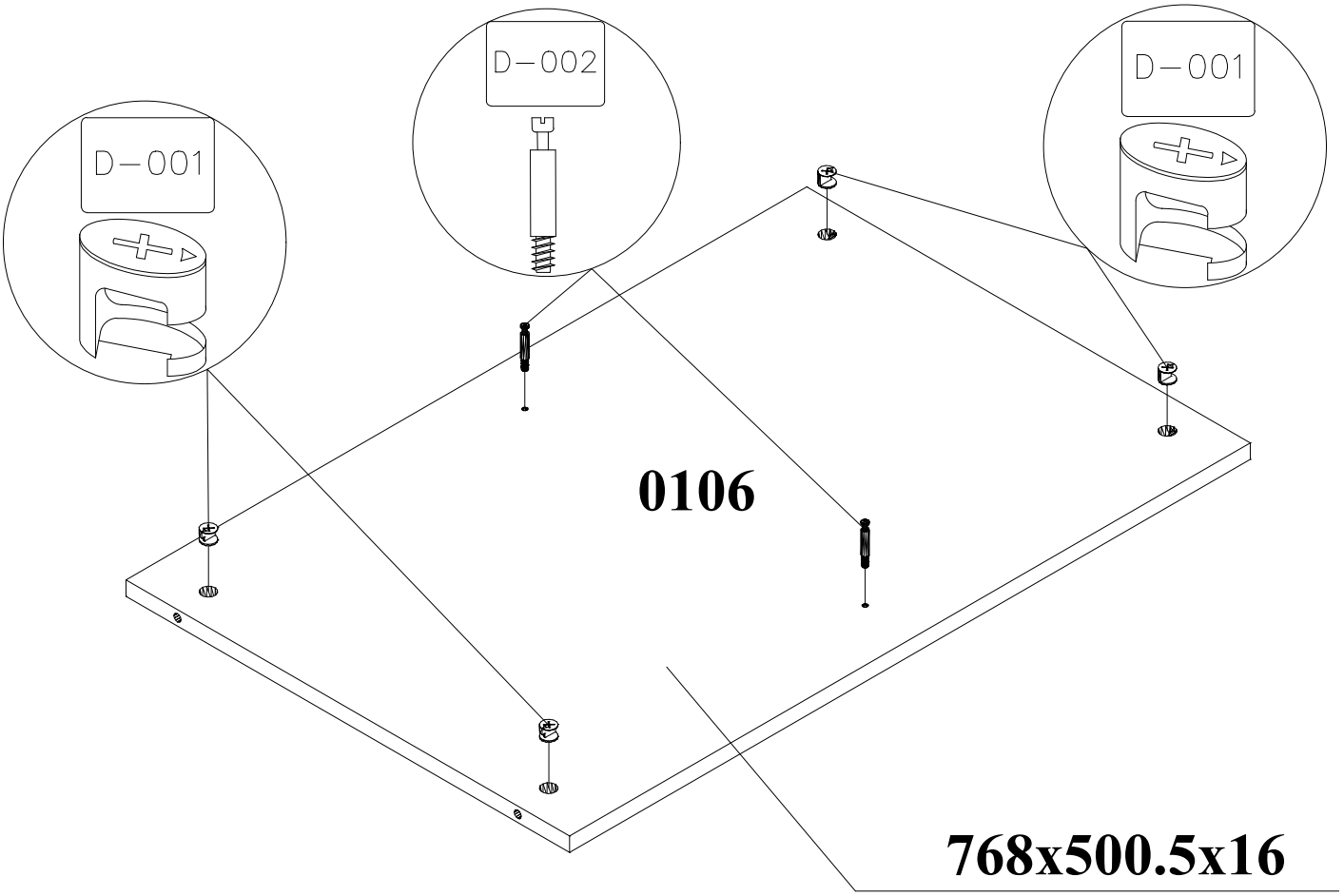
D-002
D-001
D-001
0106
768x500.5x16

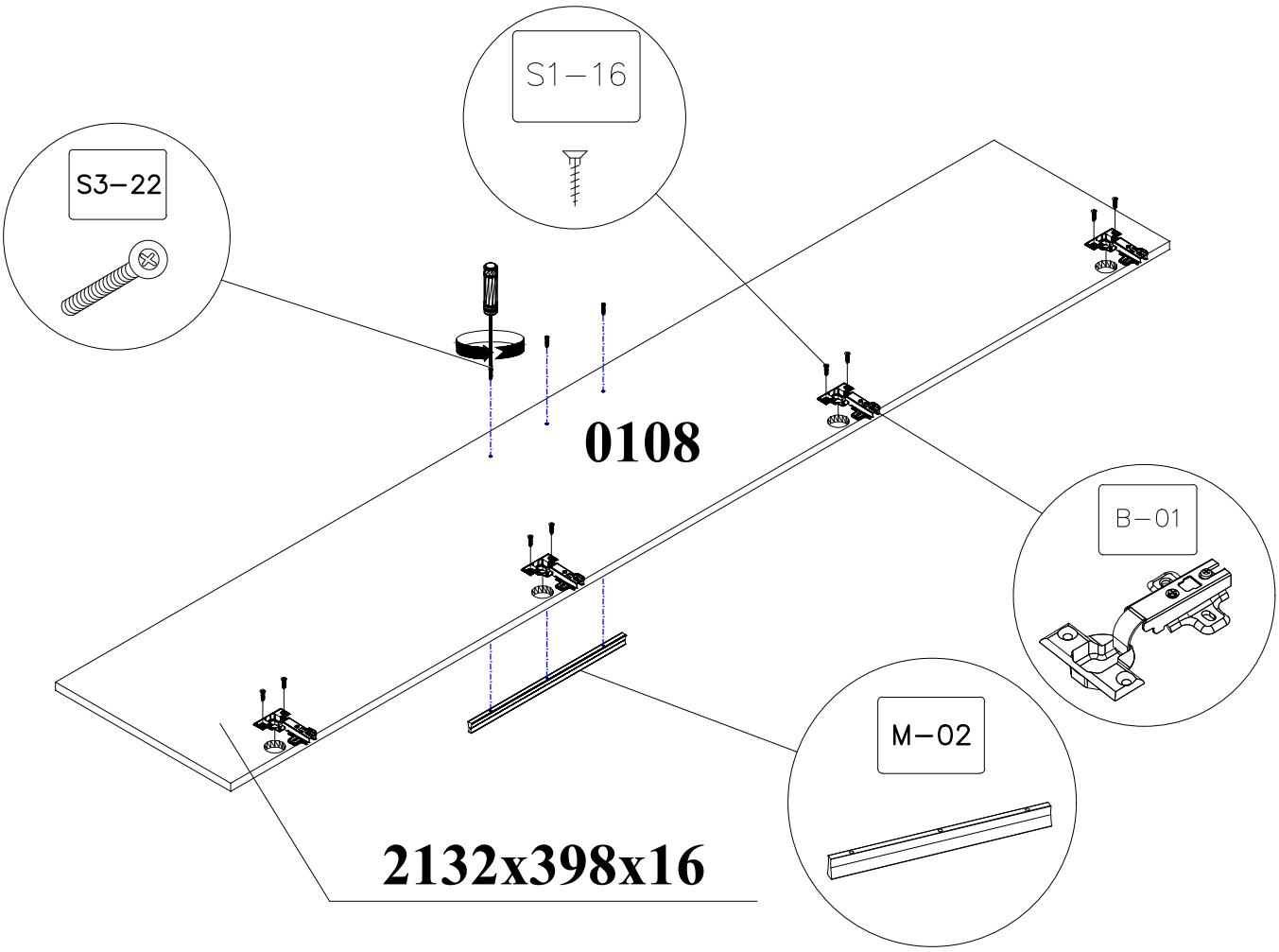
S1–16
S3–22
0108
B–01
M–02
2132x398x16

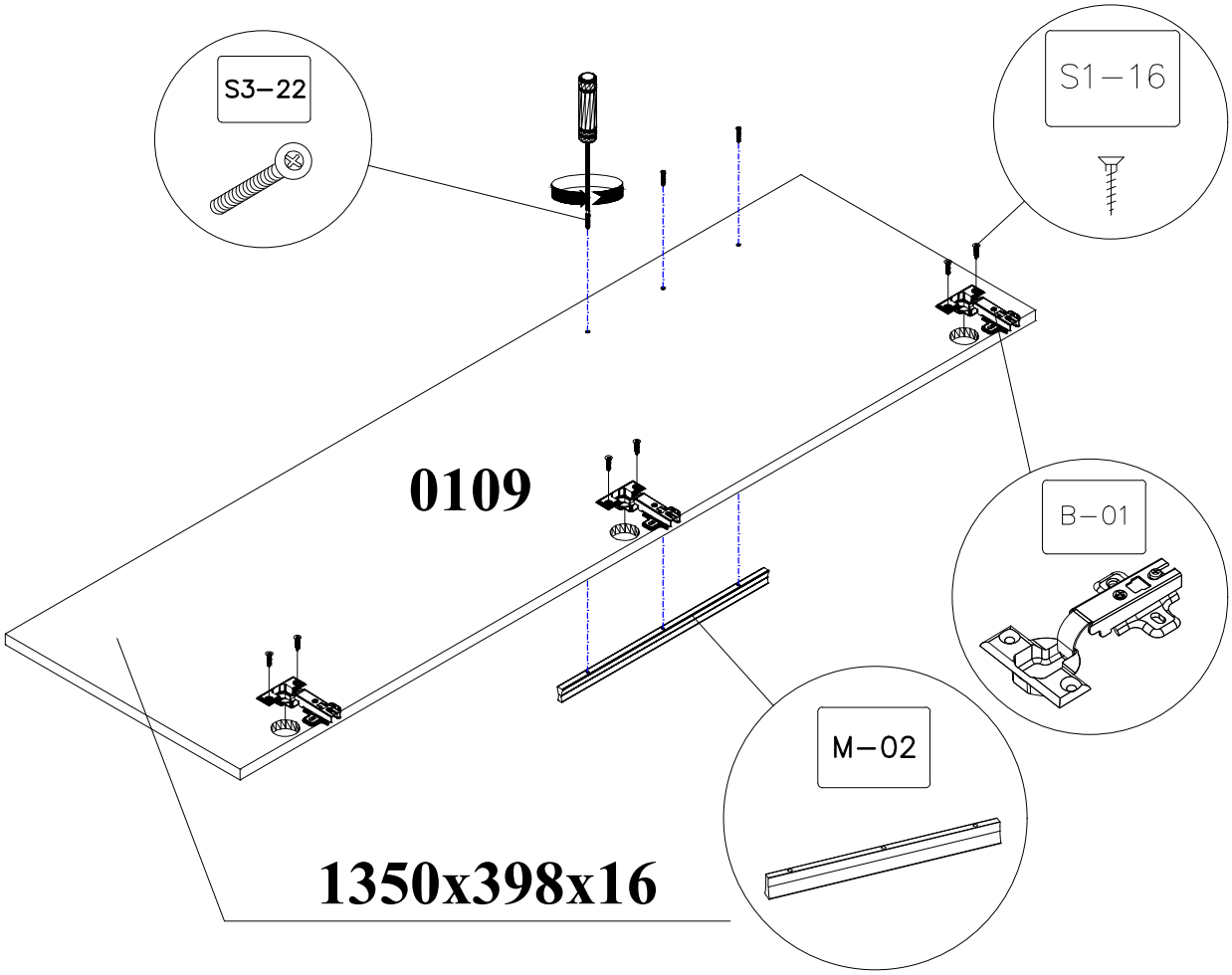
S3–22
S1–16
0109
B–01
M–02
1350x398x16

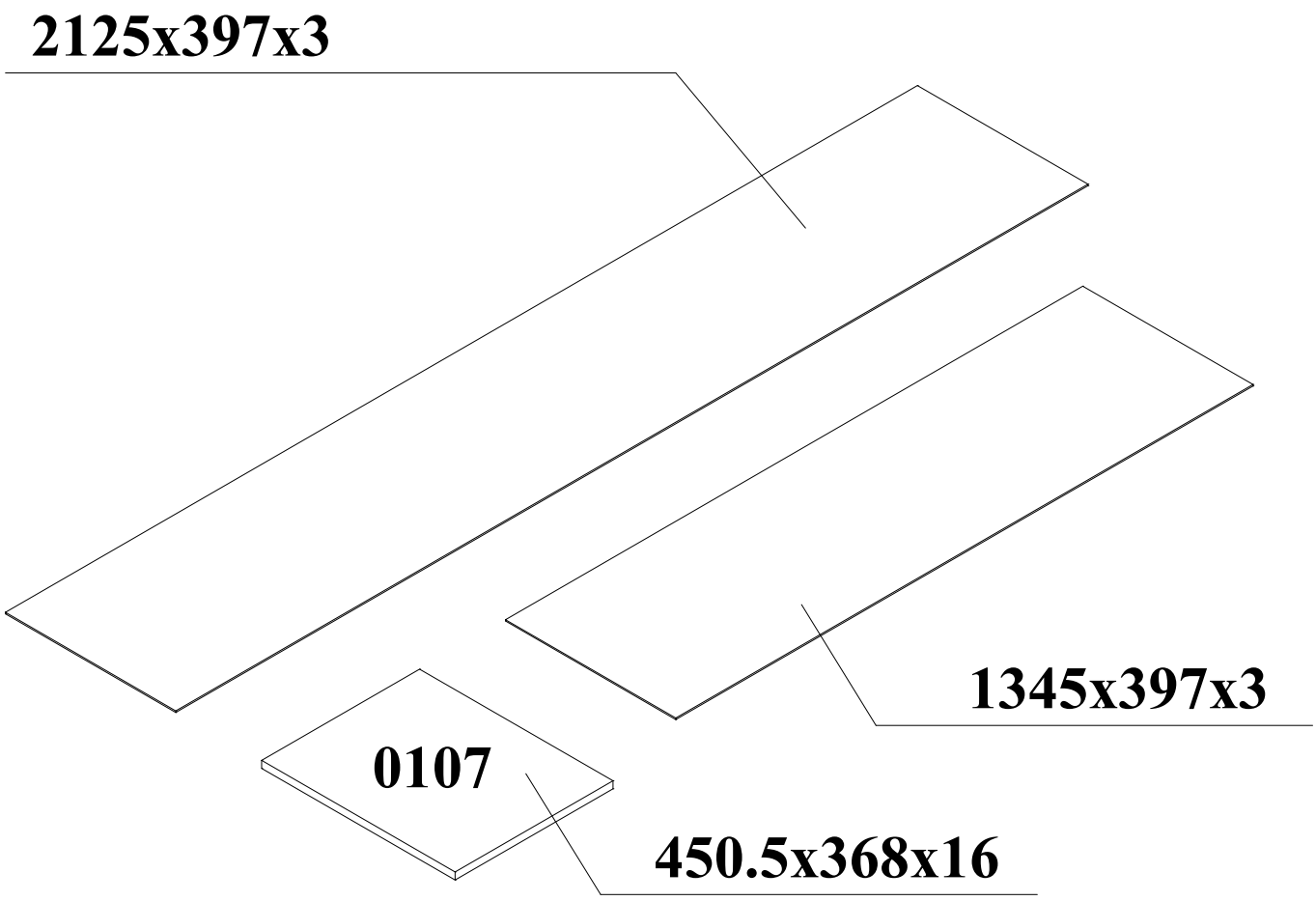
2125x397x3
1345x397x3
0107
450.5x368x16

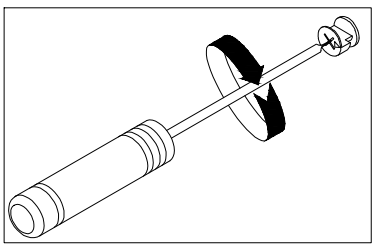

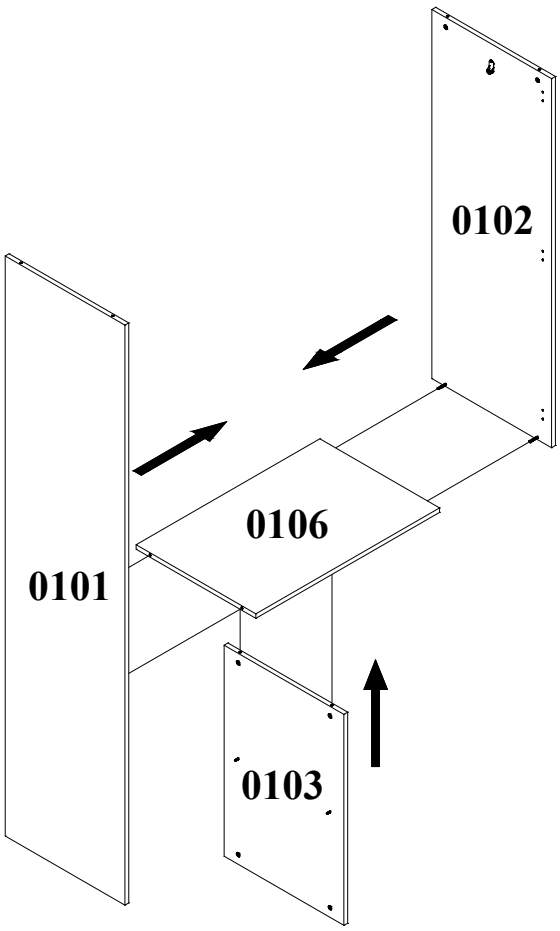
0102
0106
0101
0103

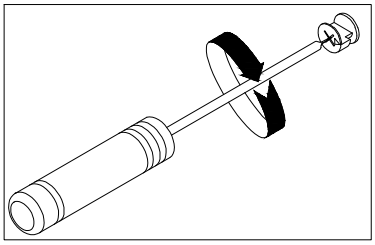

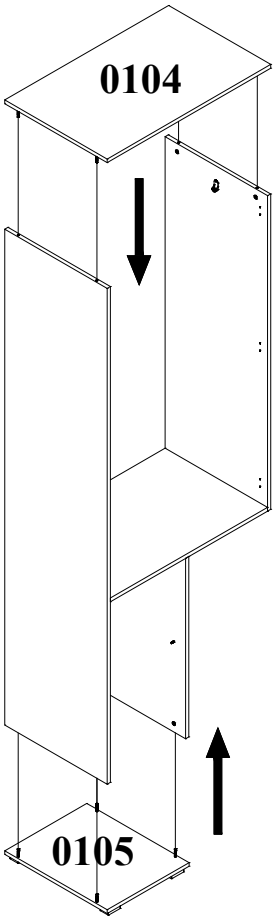
0104
0105

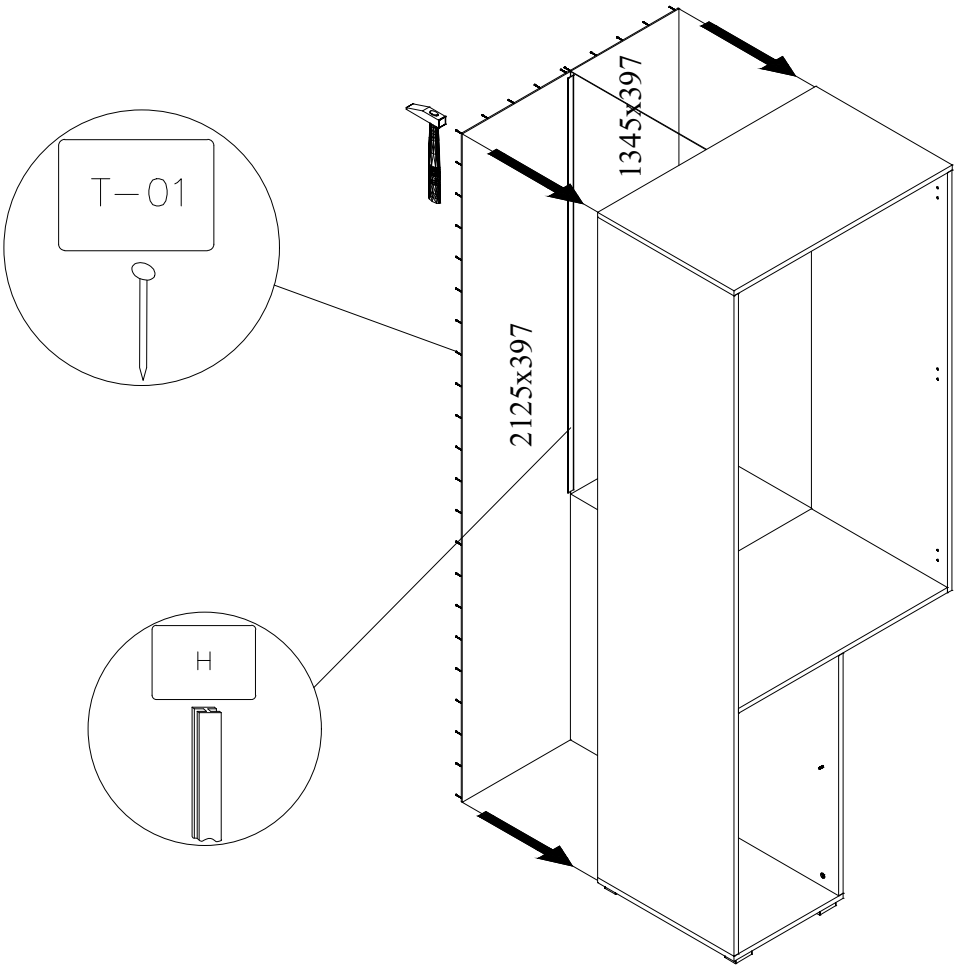
T-01
H
1345x397
2125x397

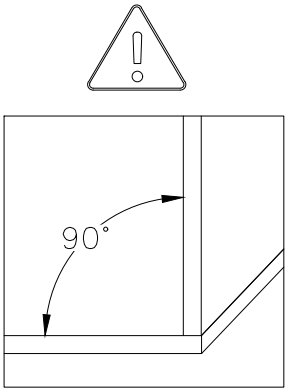
90°

Assembly instructions
Instructiuni de montaj

PRODUCT : LIVING JAZZ – CABINET
PRODUS: BIBL JAZZ – DULAP POLITE

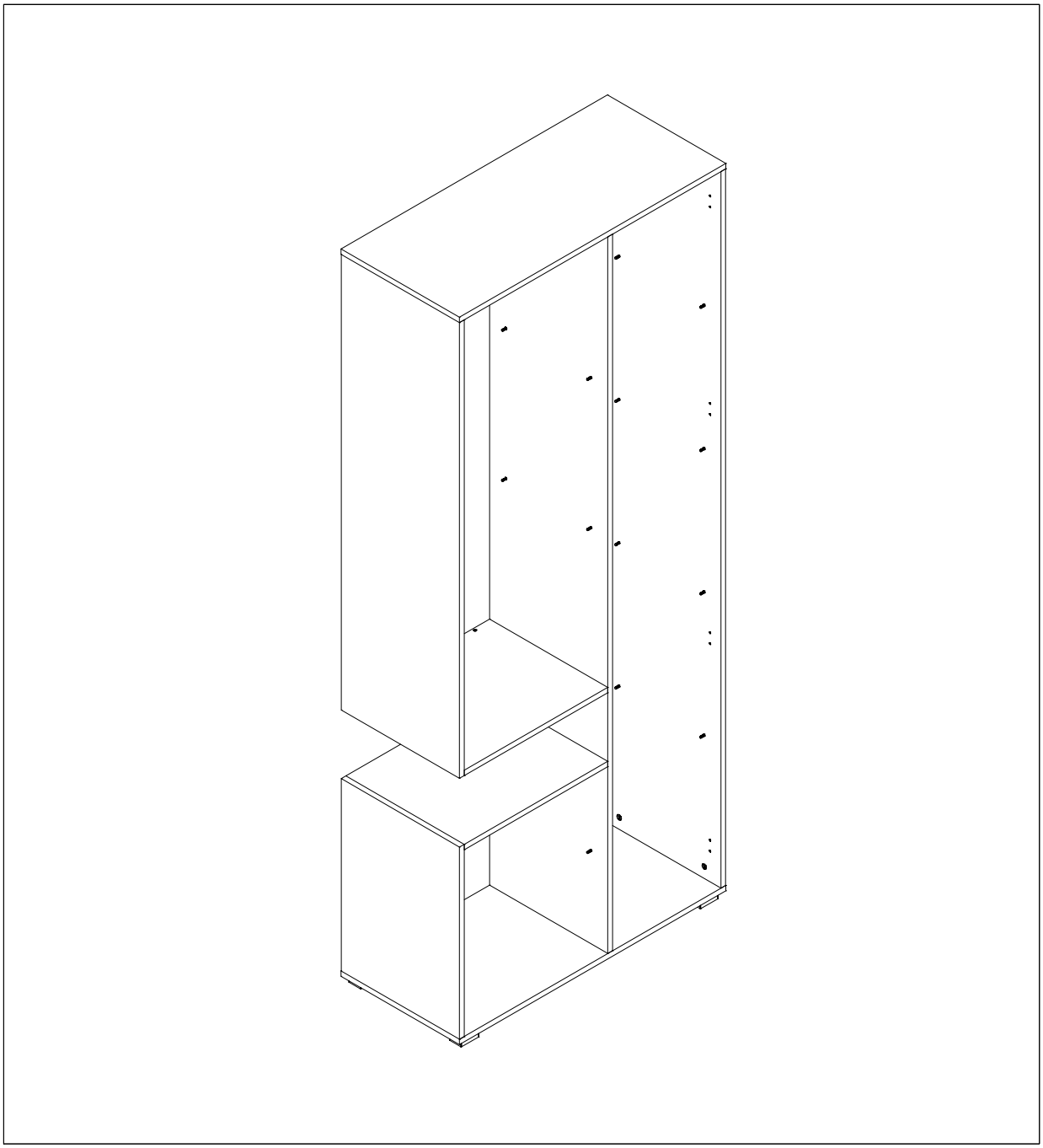

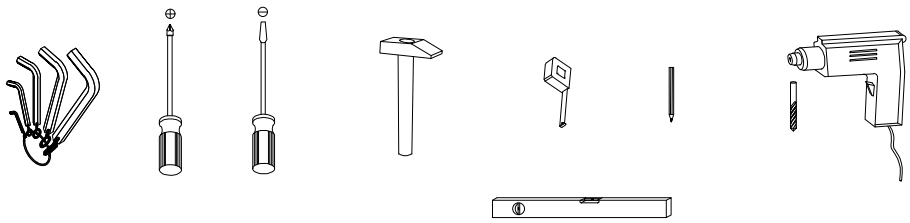

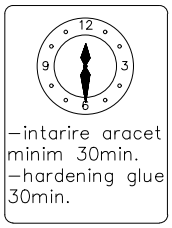

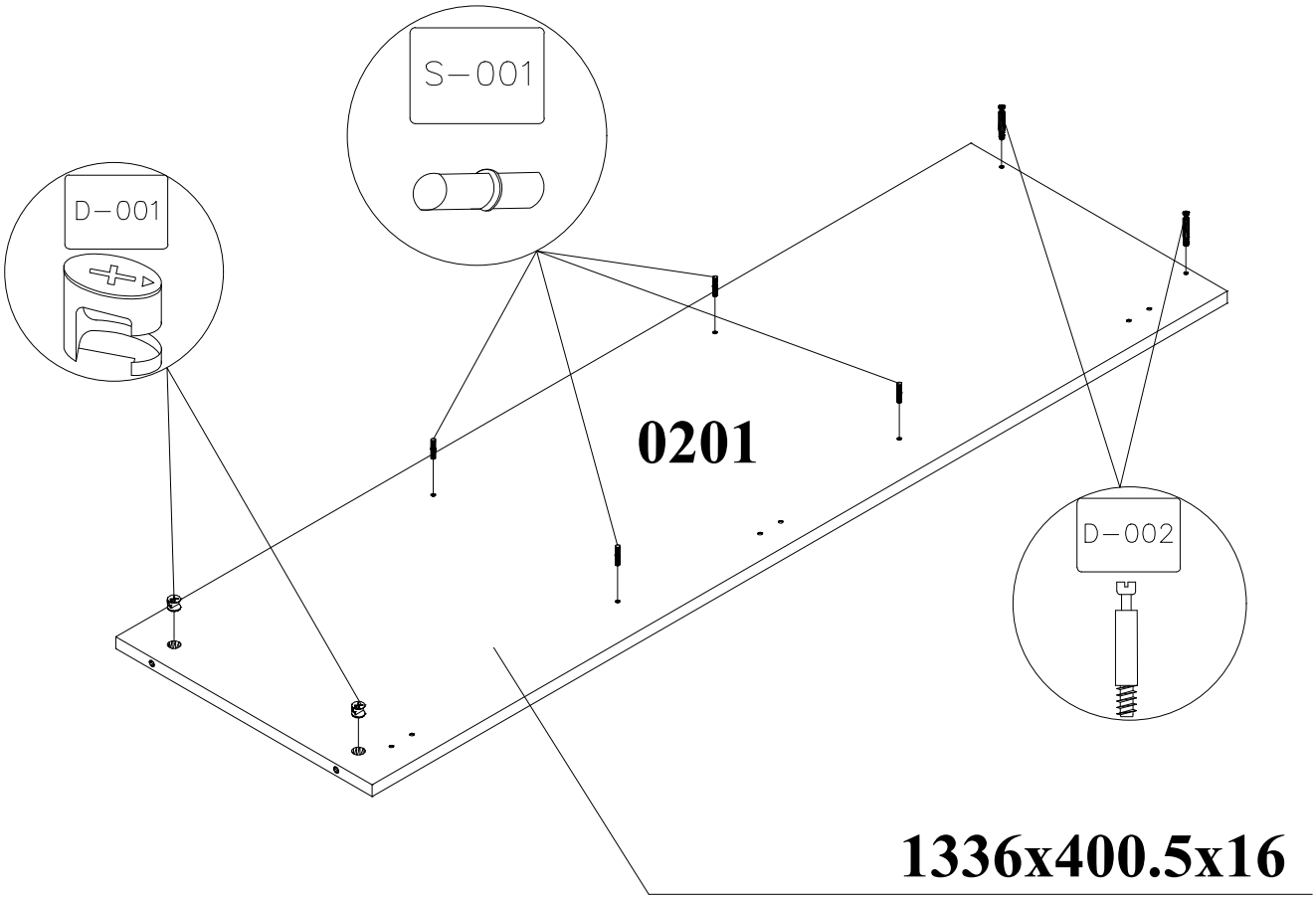
S-001
D-001
0201
D-002
1336x400.5x16

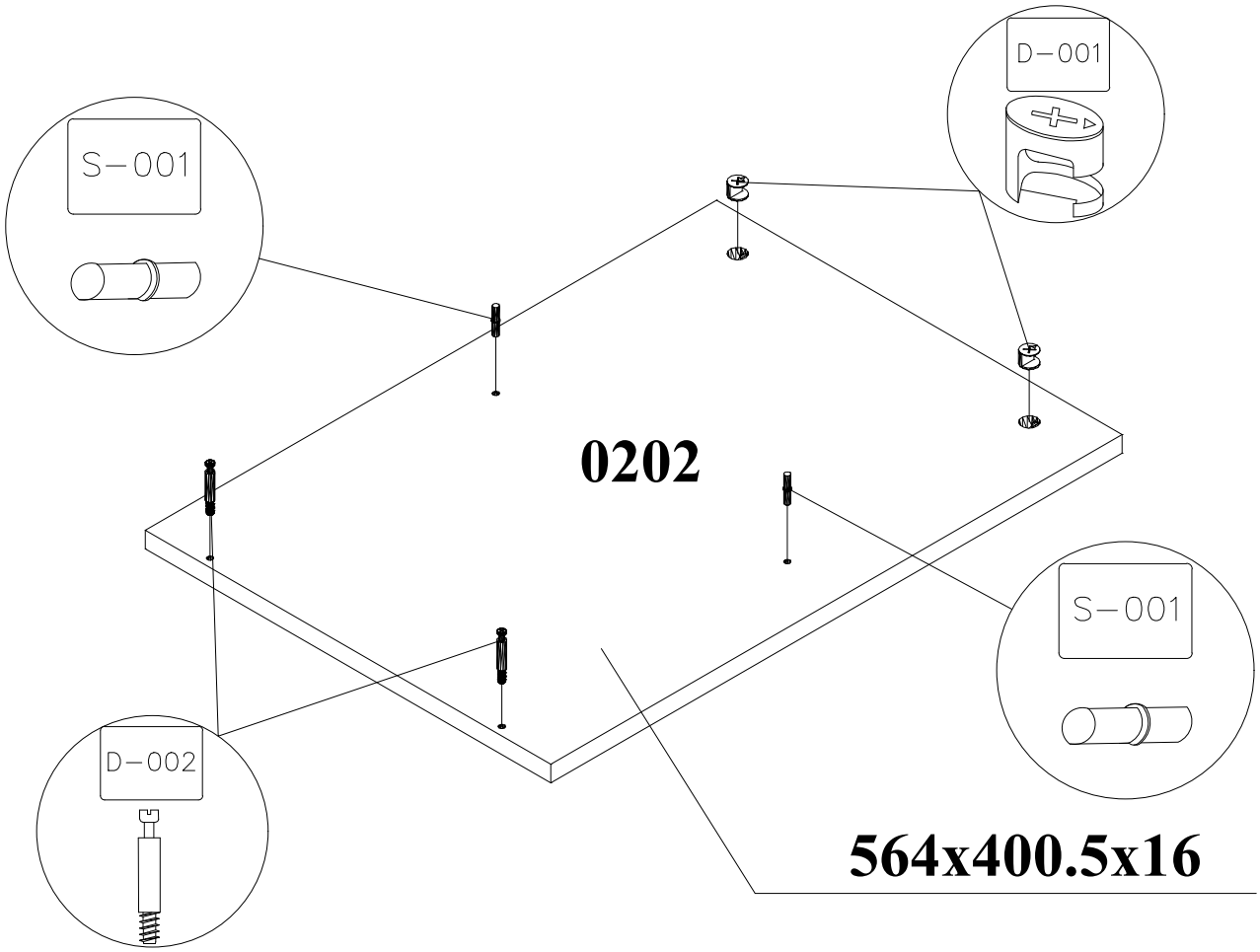
D-001
S-001
0202
S-001
D-002
564x400.5x16

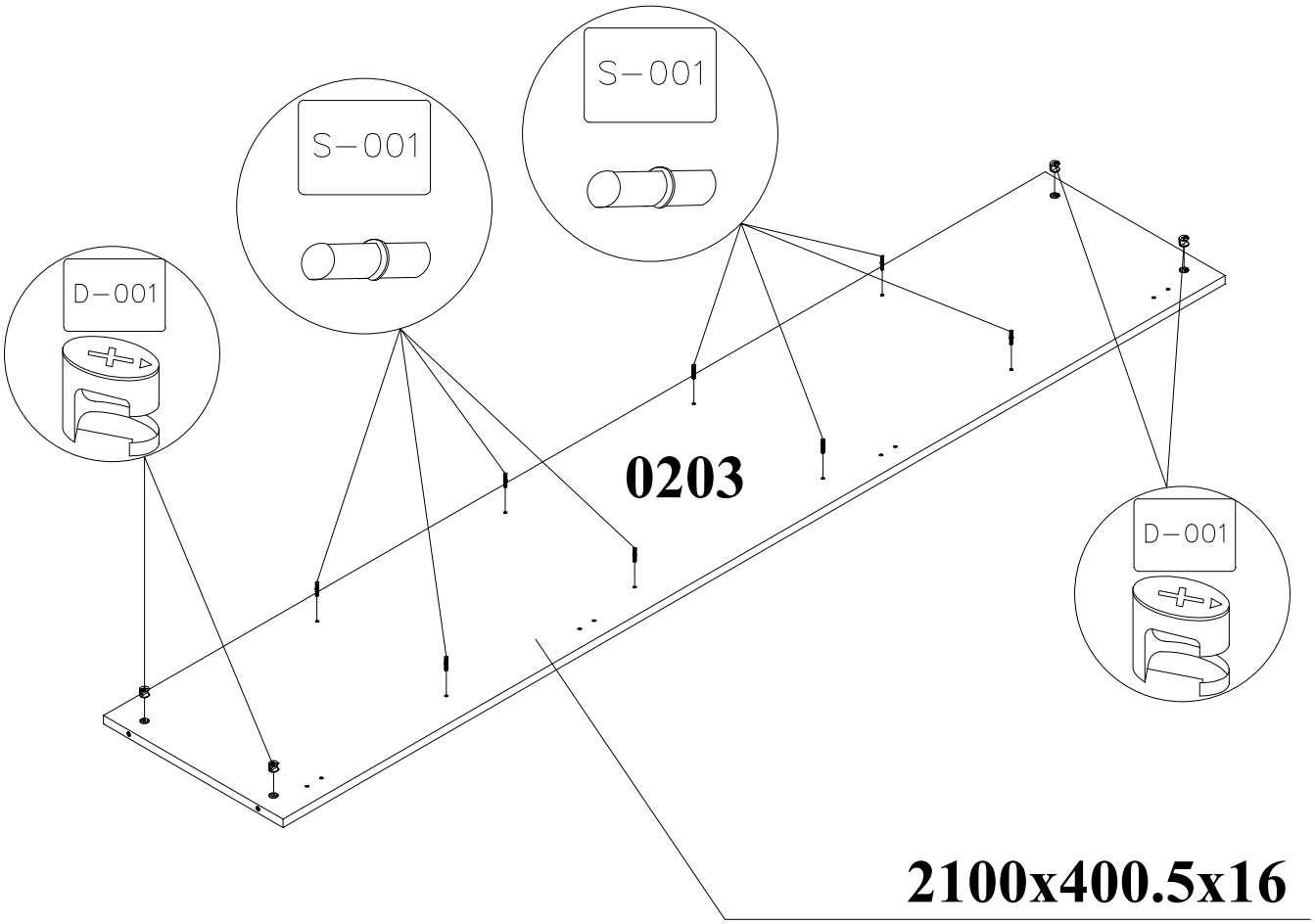
S-001
S-001
D-001
0203
D-001
2100x400.5x16

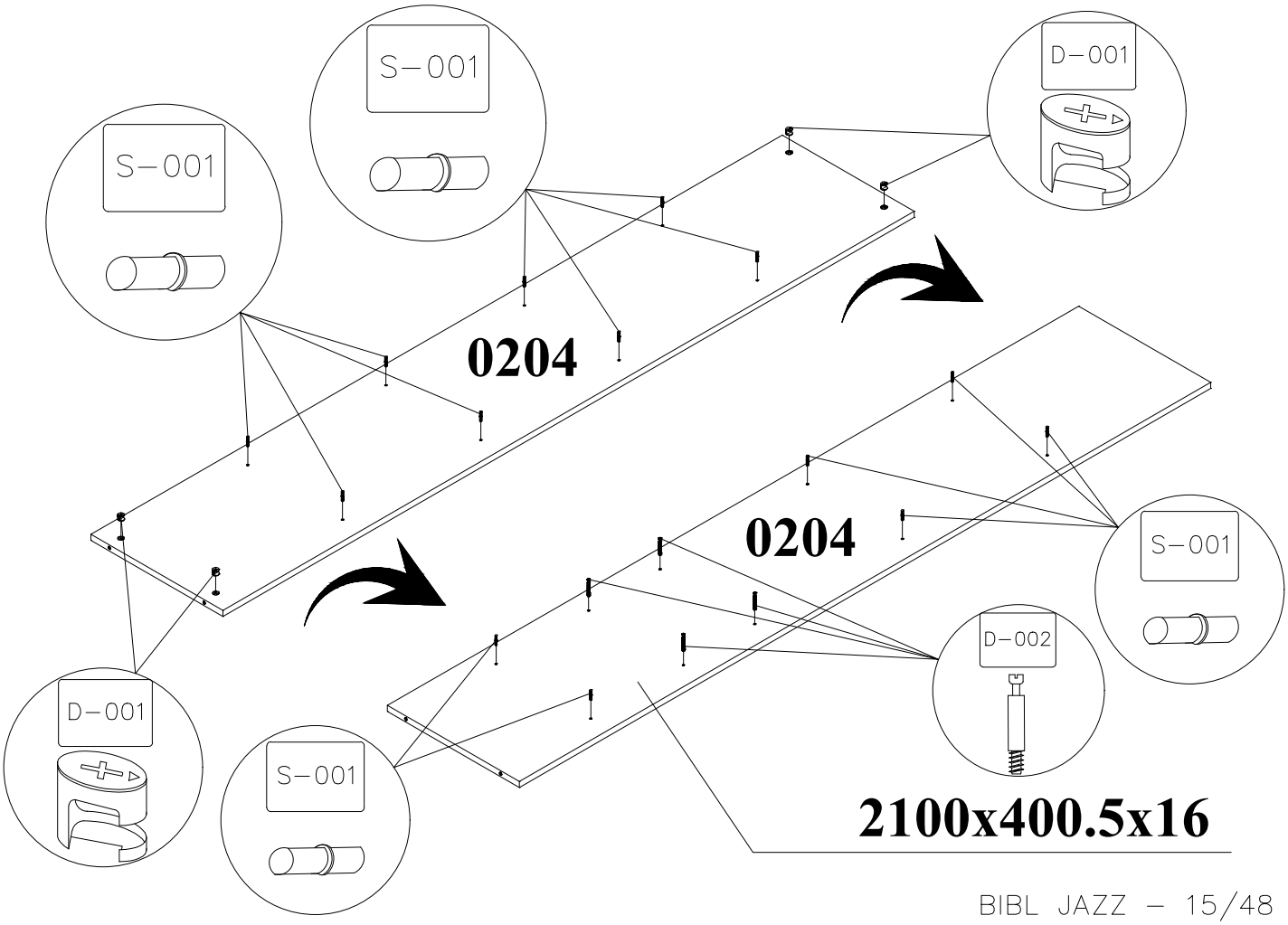
S-001
S-001
D-001
0204
0204
S-001
D-002
D-001
S-001
2100x400.5x16

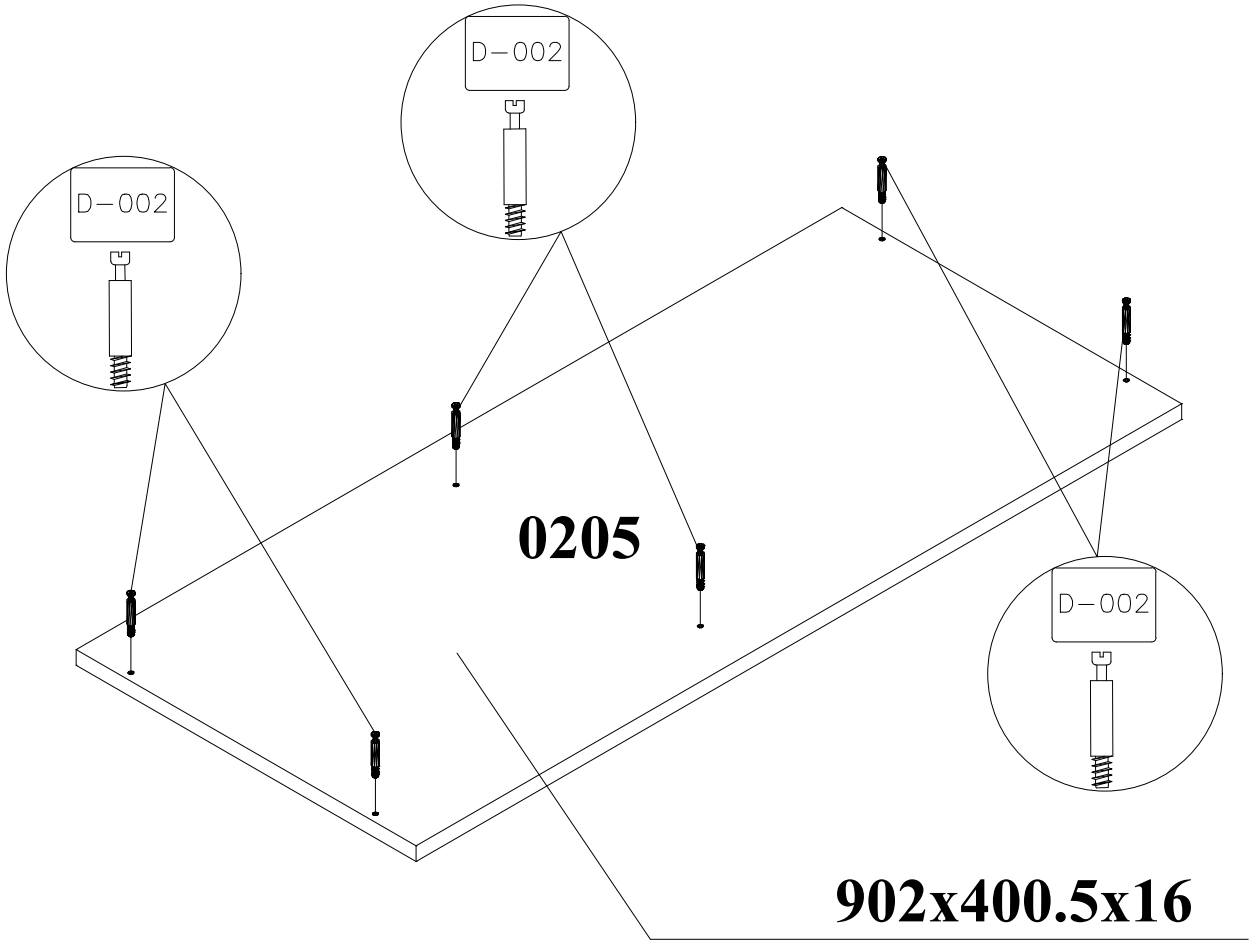
D-002
D-002
0205
D-002
902x400.5x16

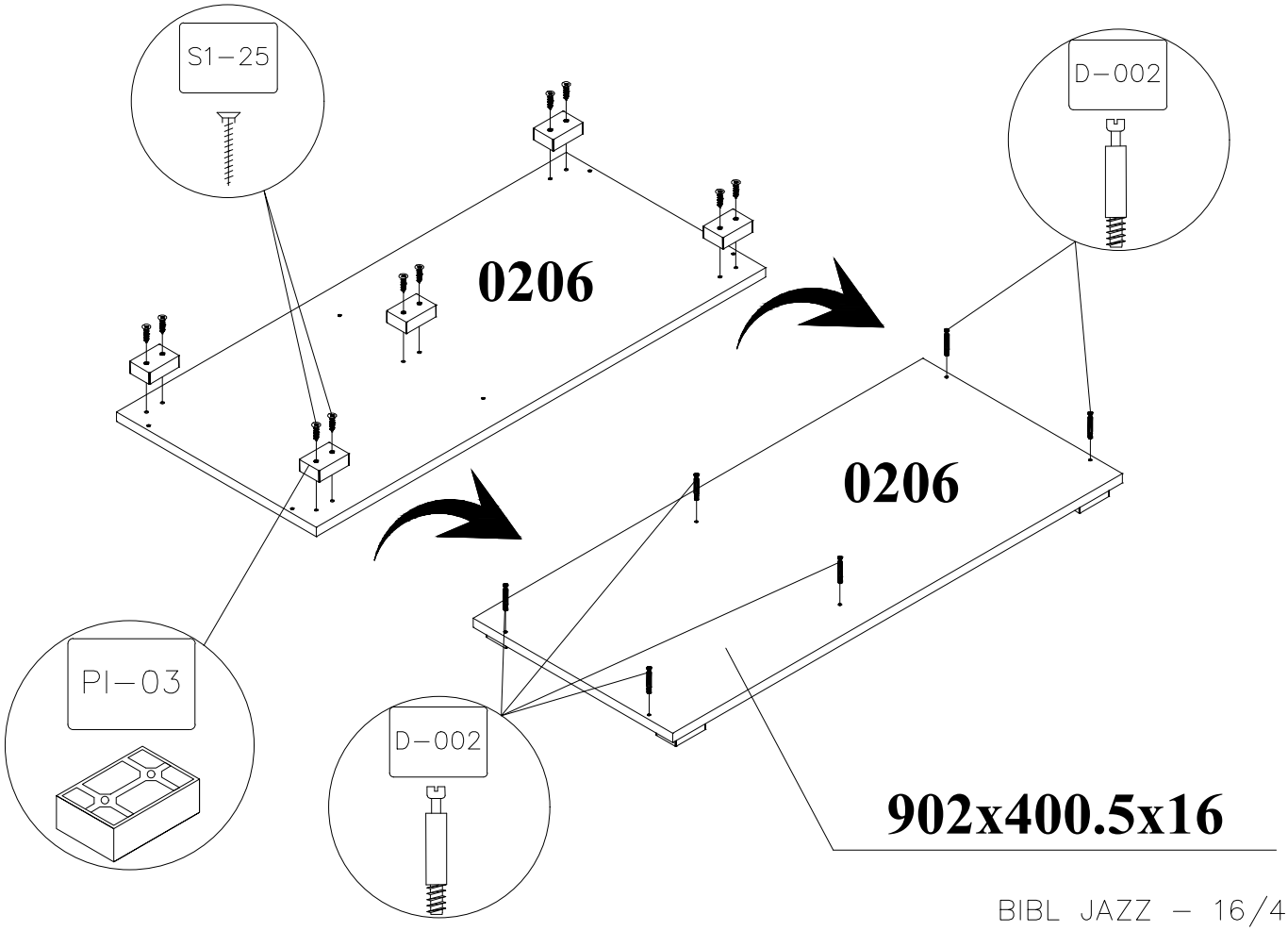
S1-25
0206
D-002
0206
PI-03
D-002
902x400.5x16

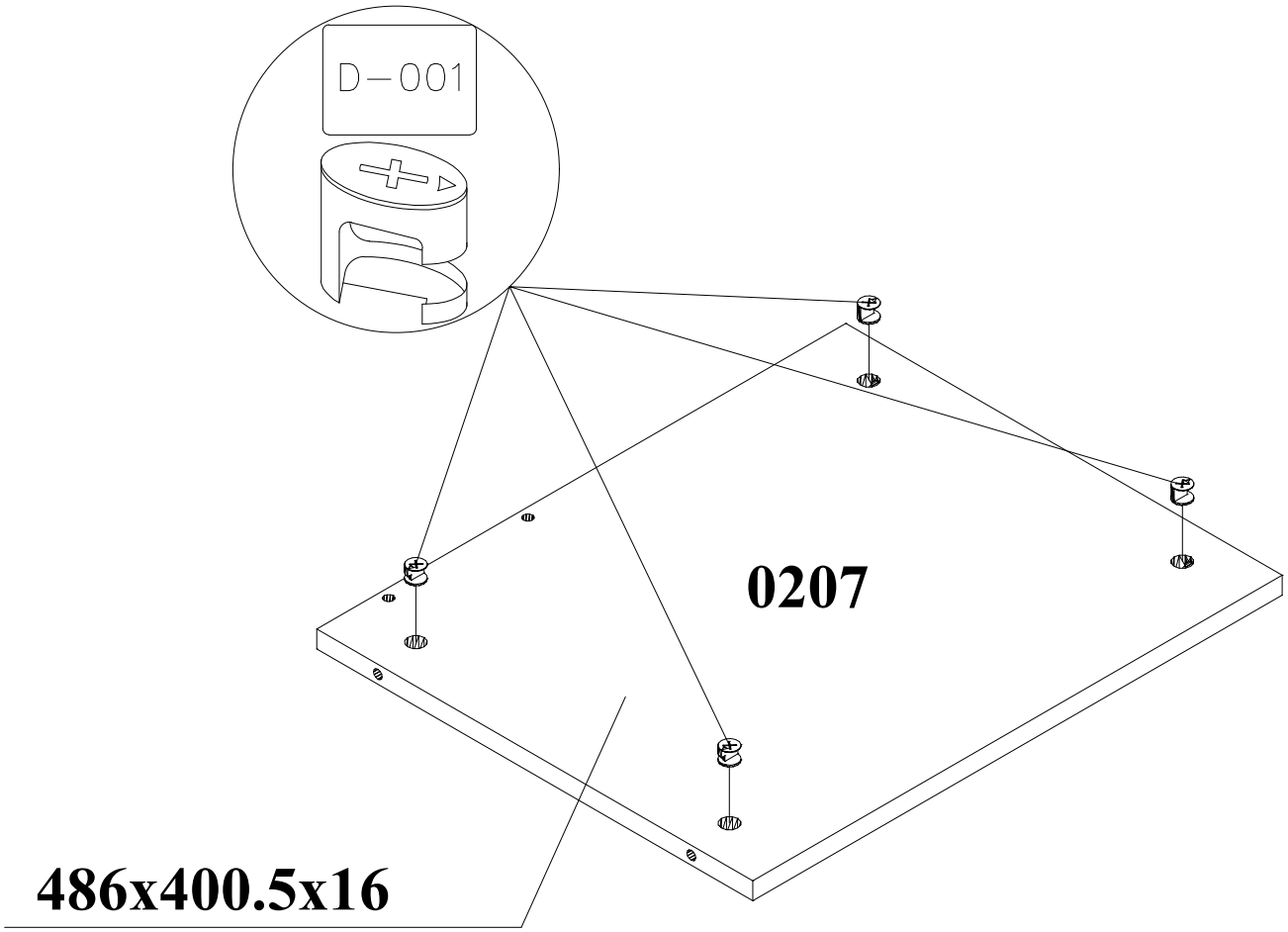
D-001
0207
486x400.5x16

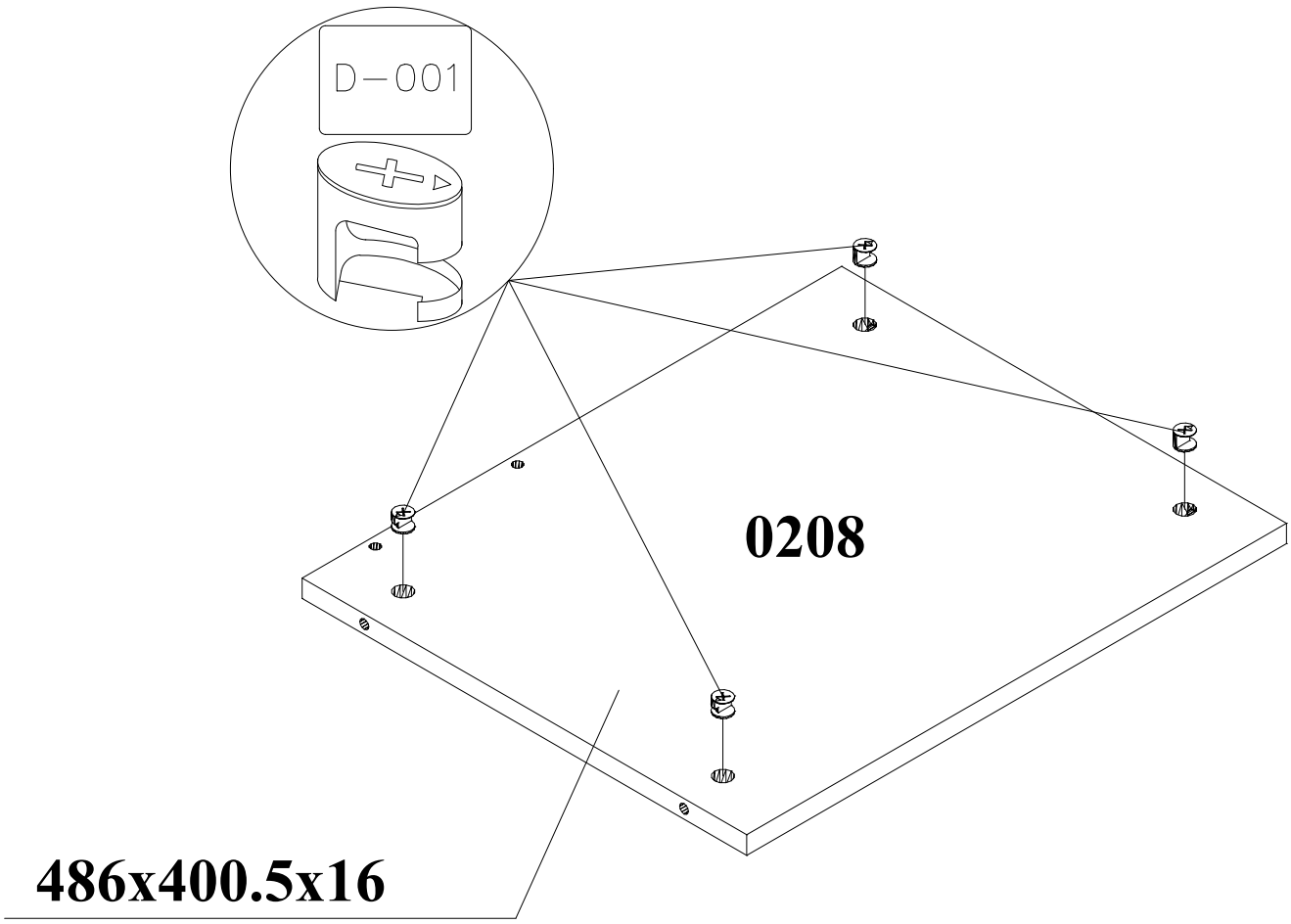
D-001
0208
486x400.5x16

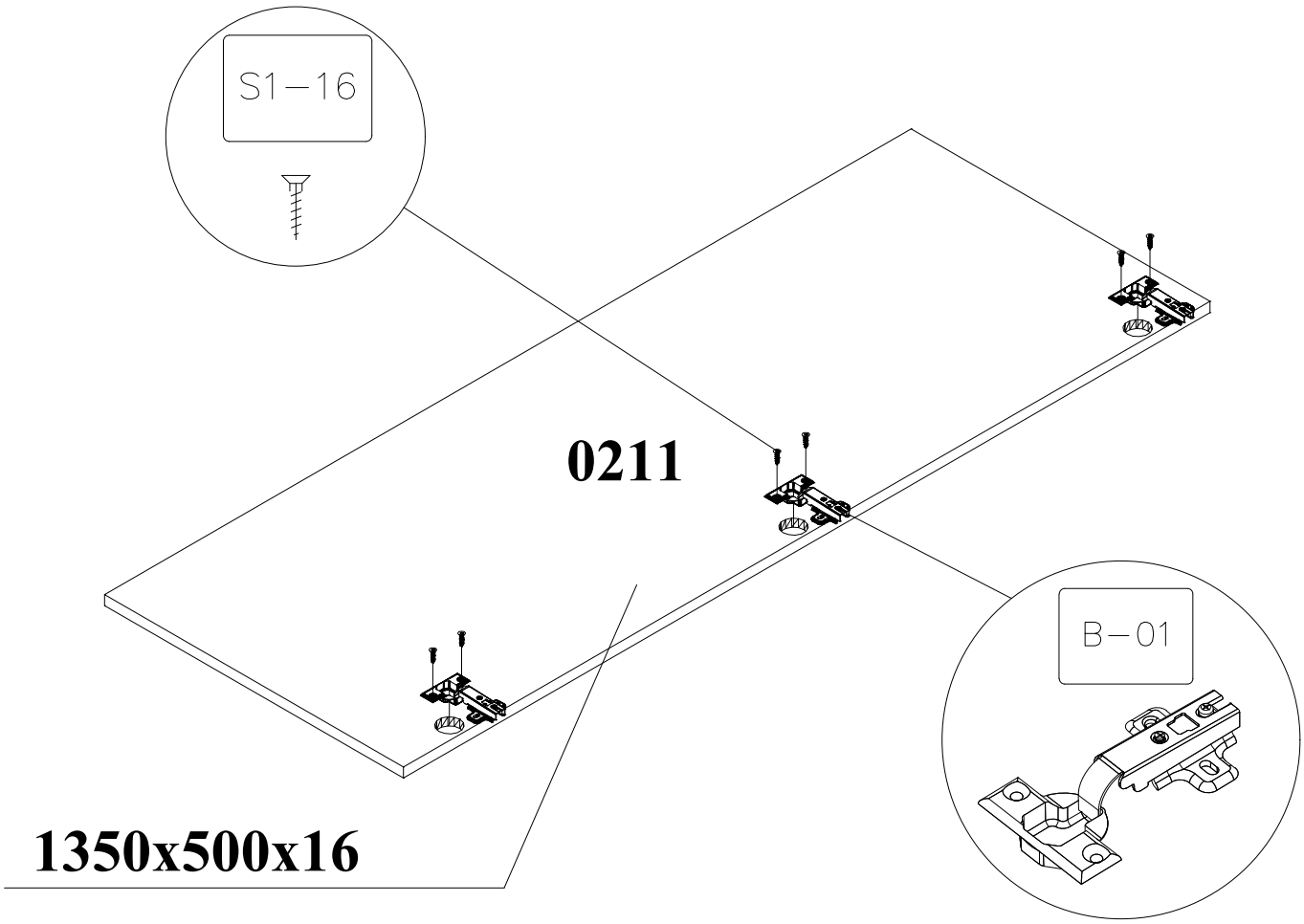
S1–16
0211
B–01
1350x500x16

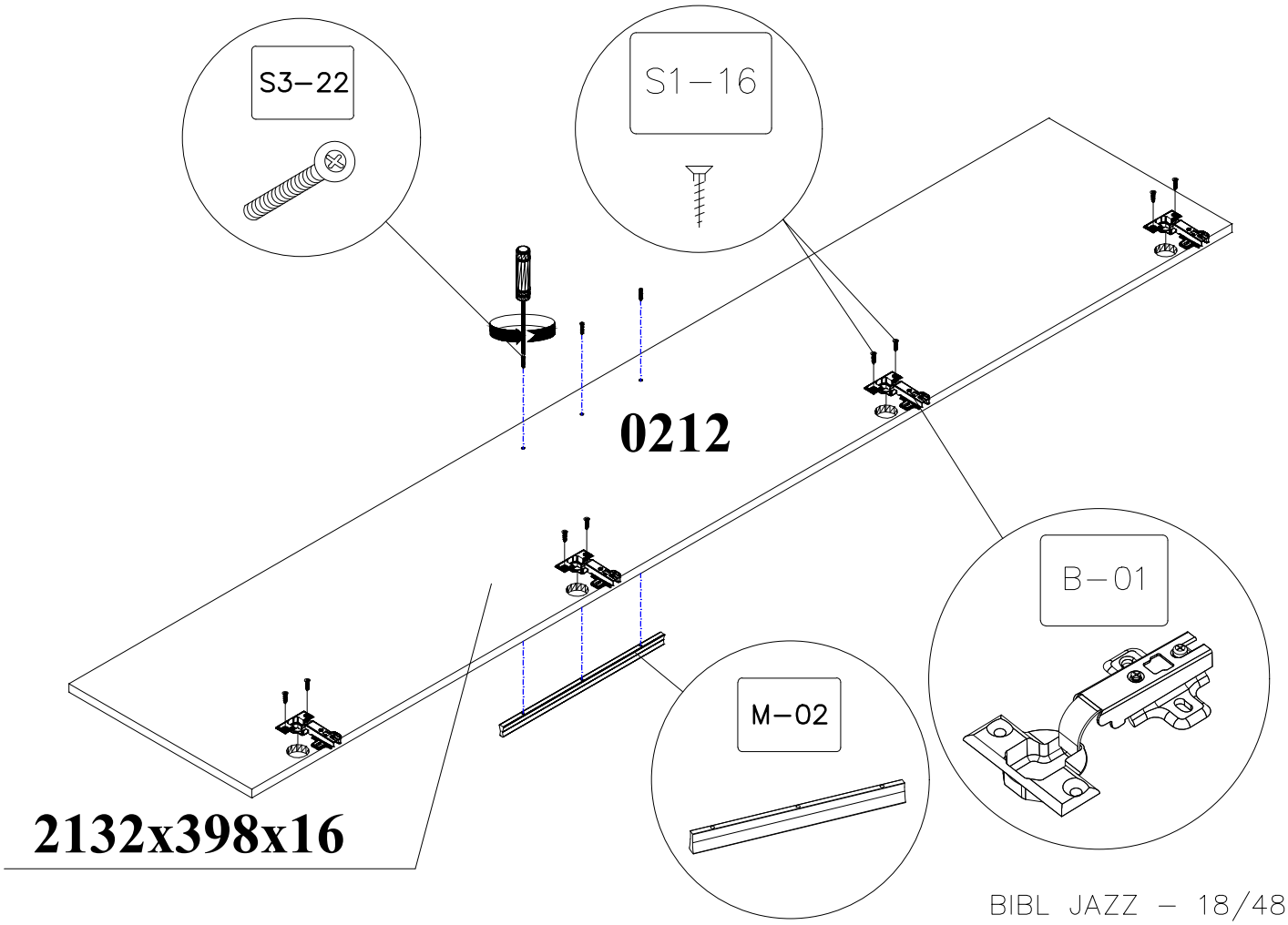
S3–22
S1–16
0212
B–01
M–02
2132x398x16

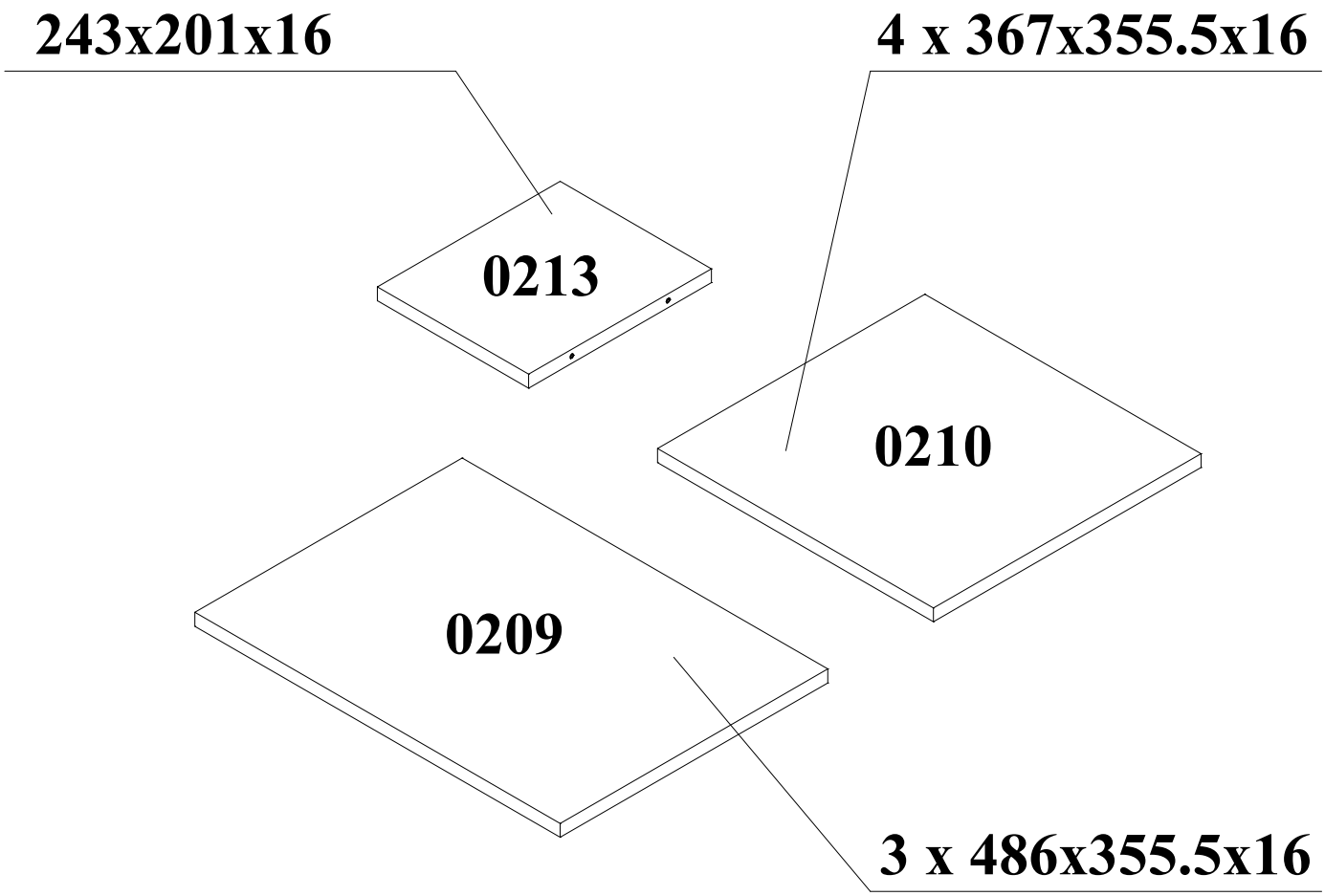
243x201x16
4 x 367x355.5x16
0213
0210
0209
3 x 486x355.5x16

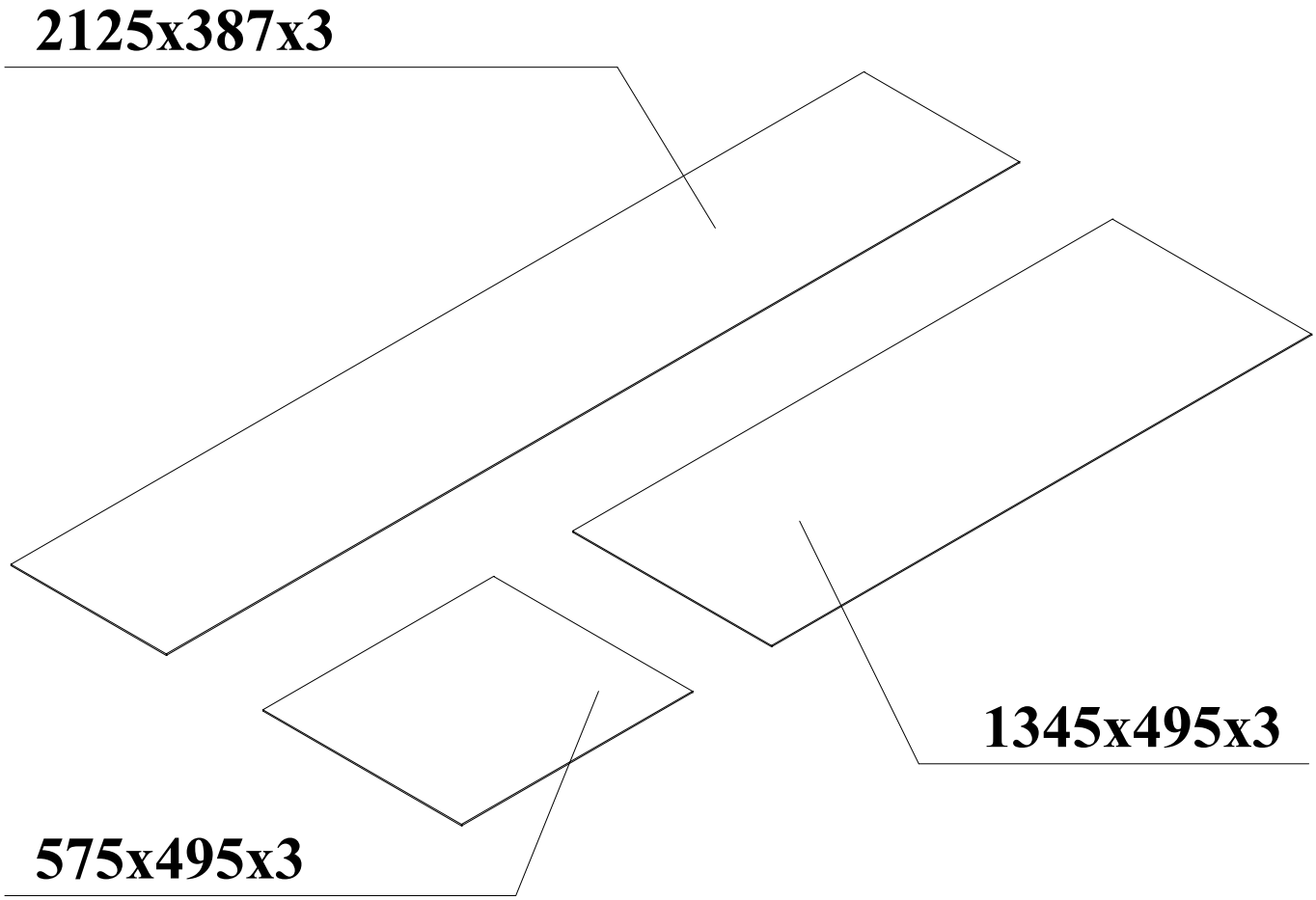
2125x387x3
1345x495x3
575x495x3

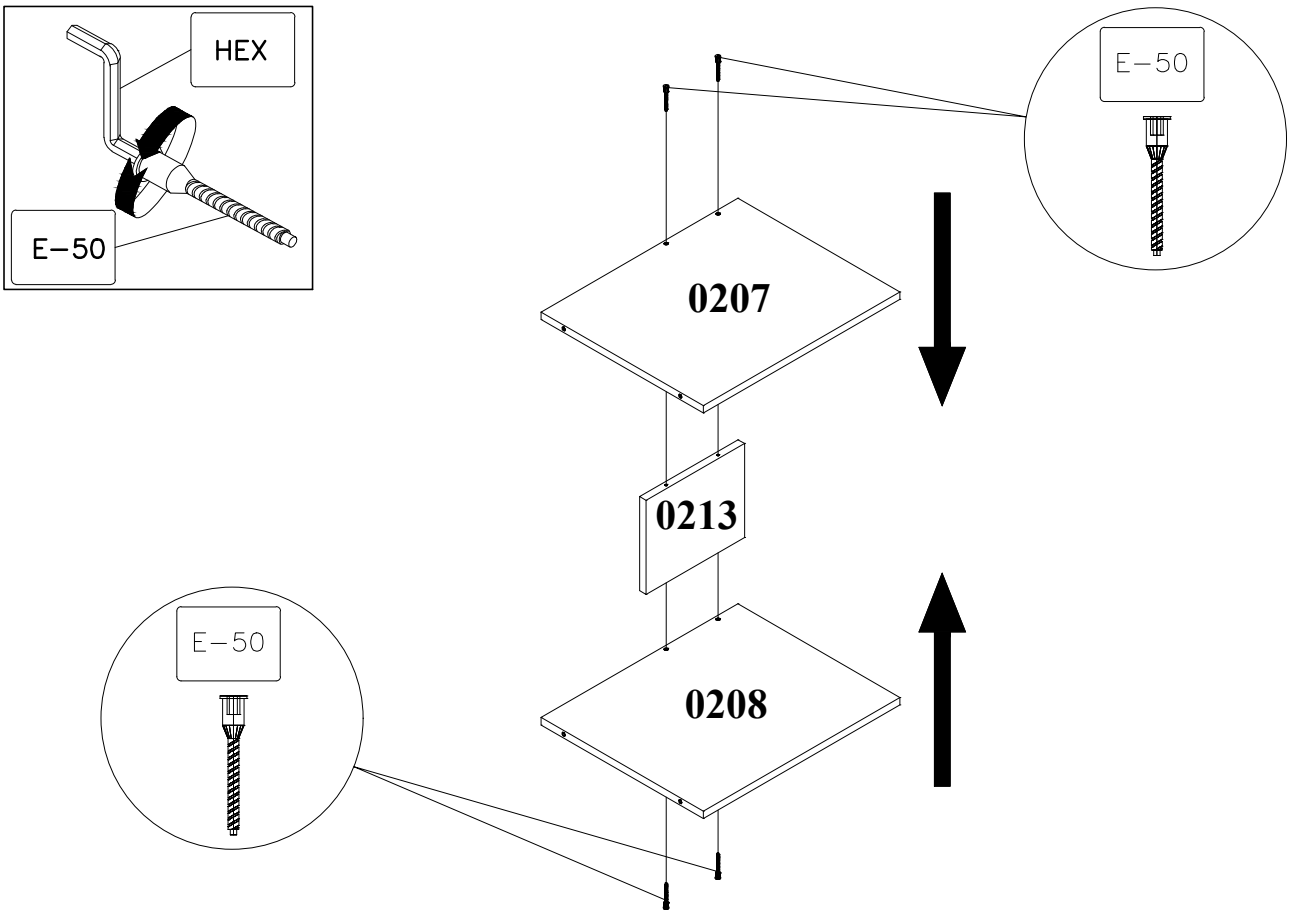
HEX
E-50
E-50
0207
0213
E-50
0208

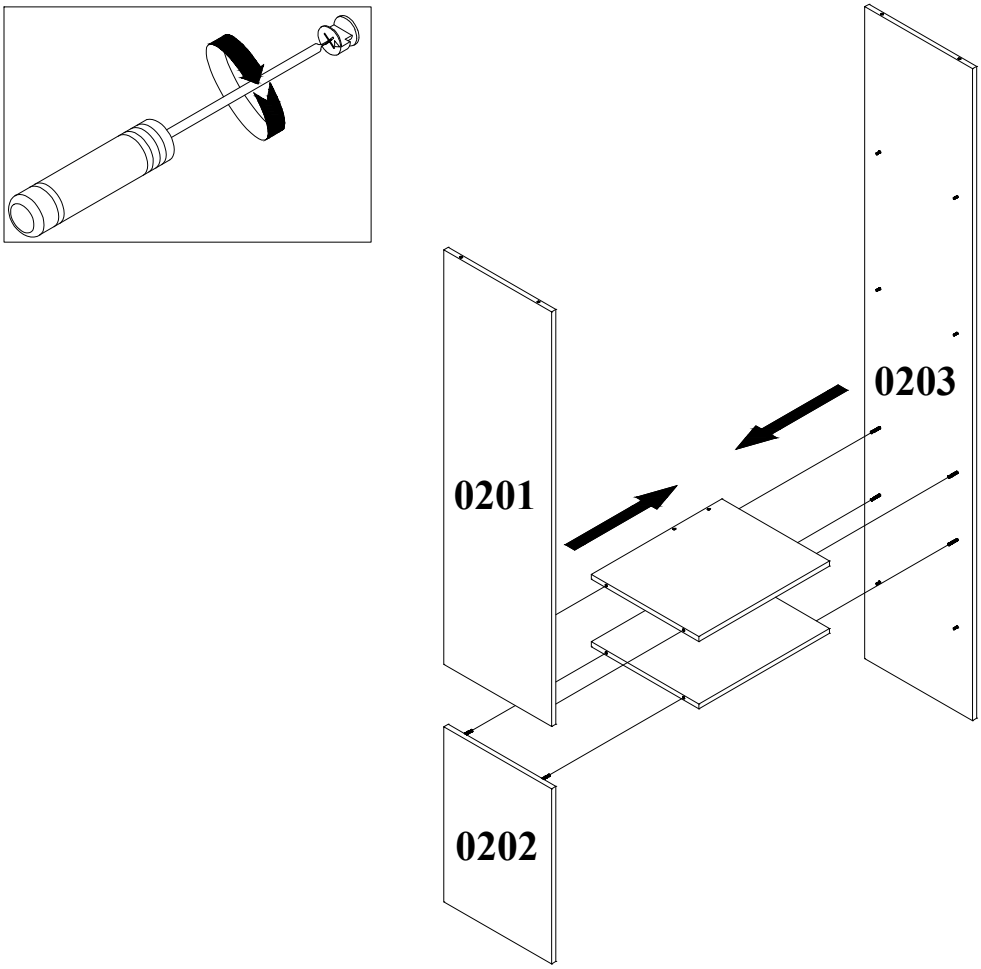
0203
0201
0202

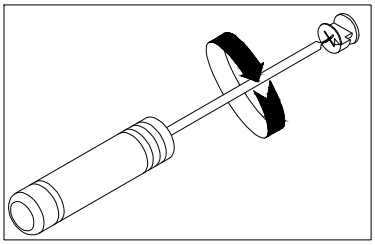

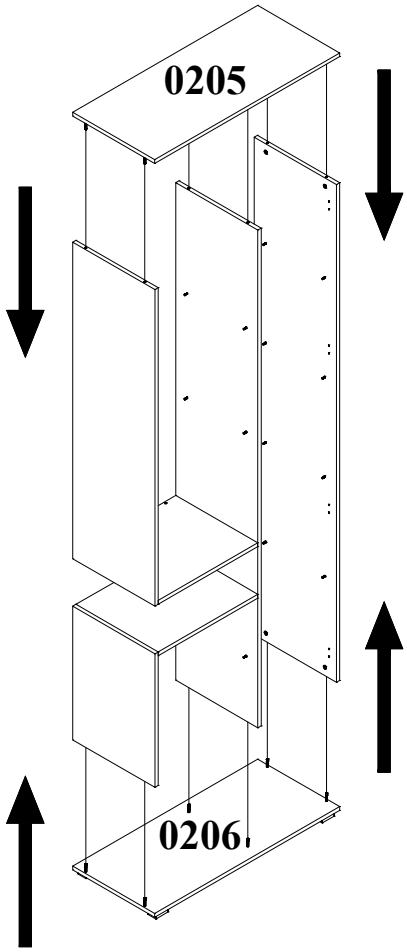
0205
0206

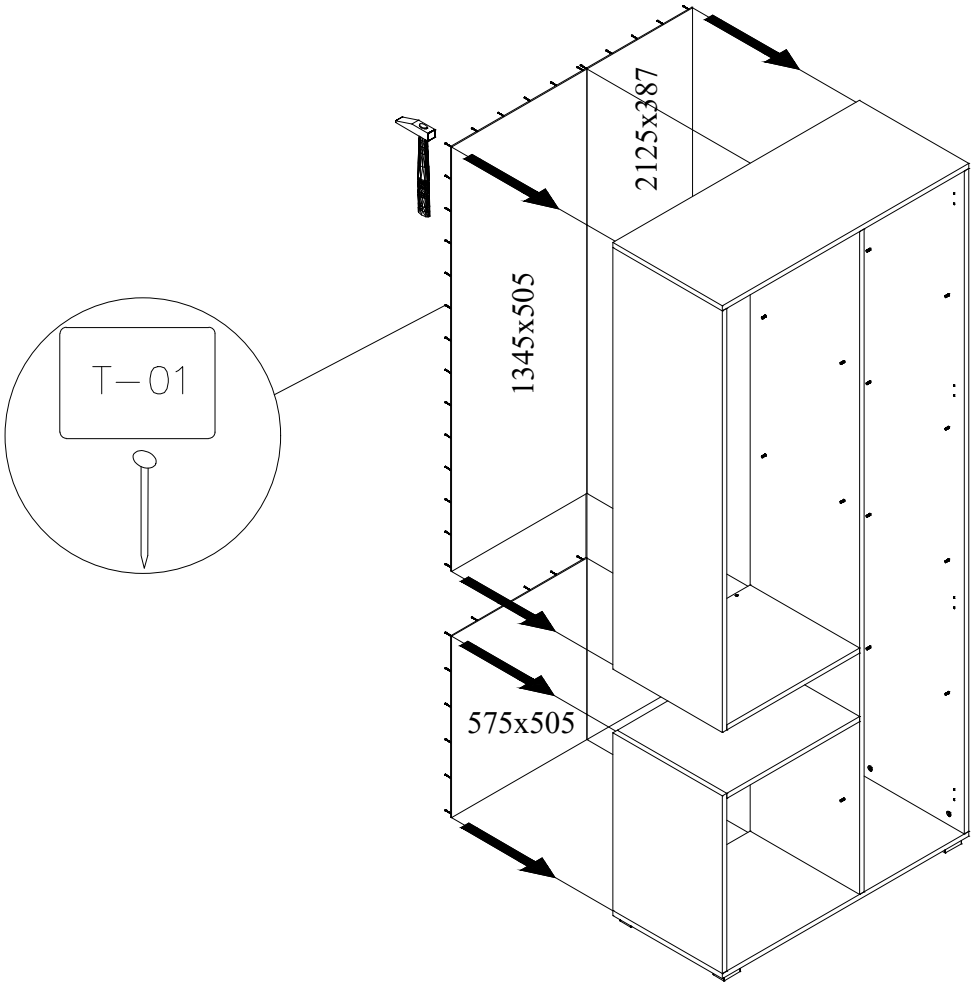
T-01
2125x387
1345x505
575x505

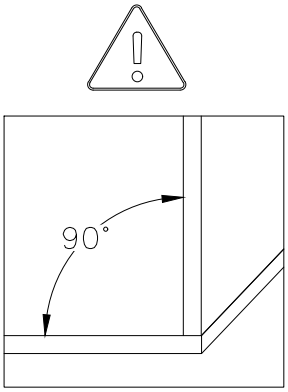
90°

Assembly instructions
Instructiuni de montaj

PRODUCT : LIVING JAZZ – TV STAND
PRODUS: BIBL JAZZ – COMODA TV

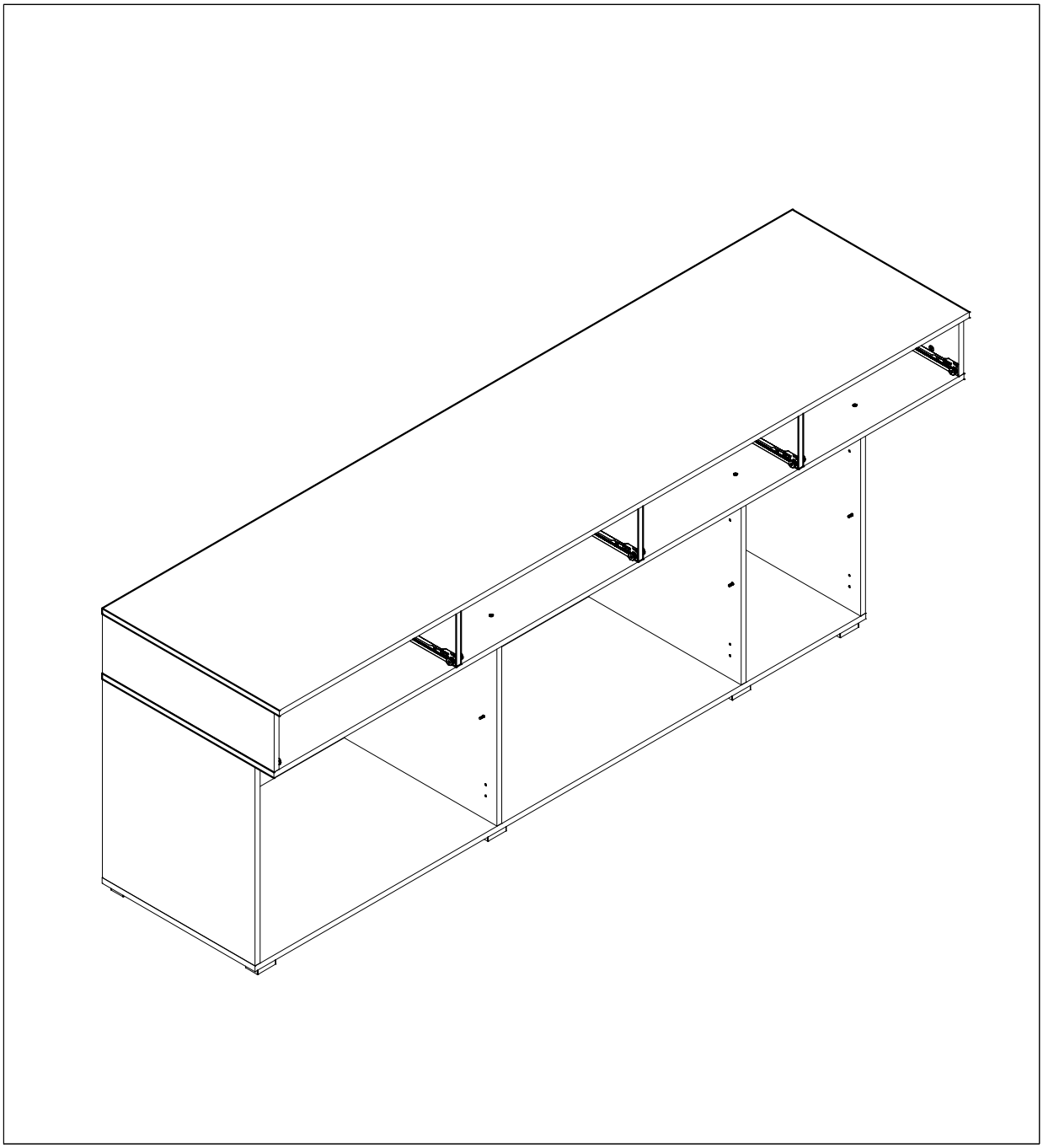

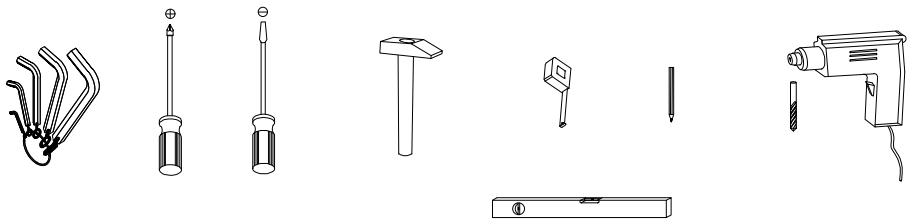

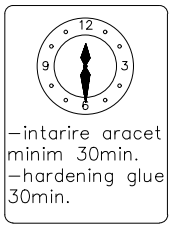

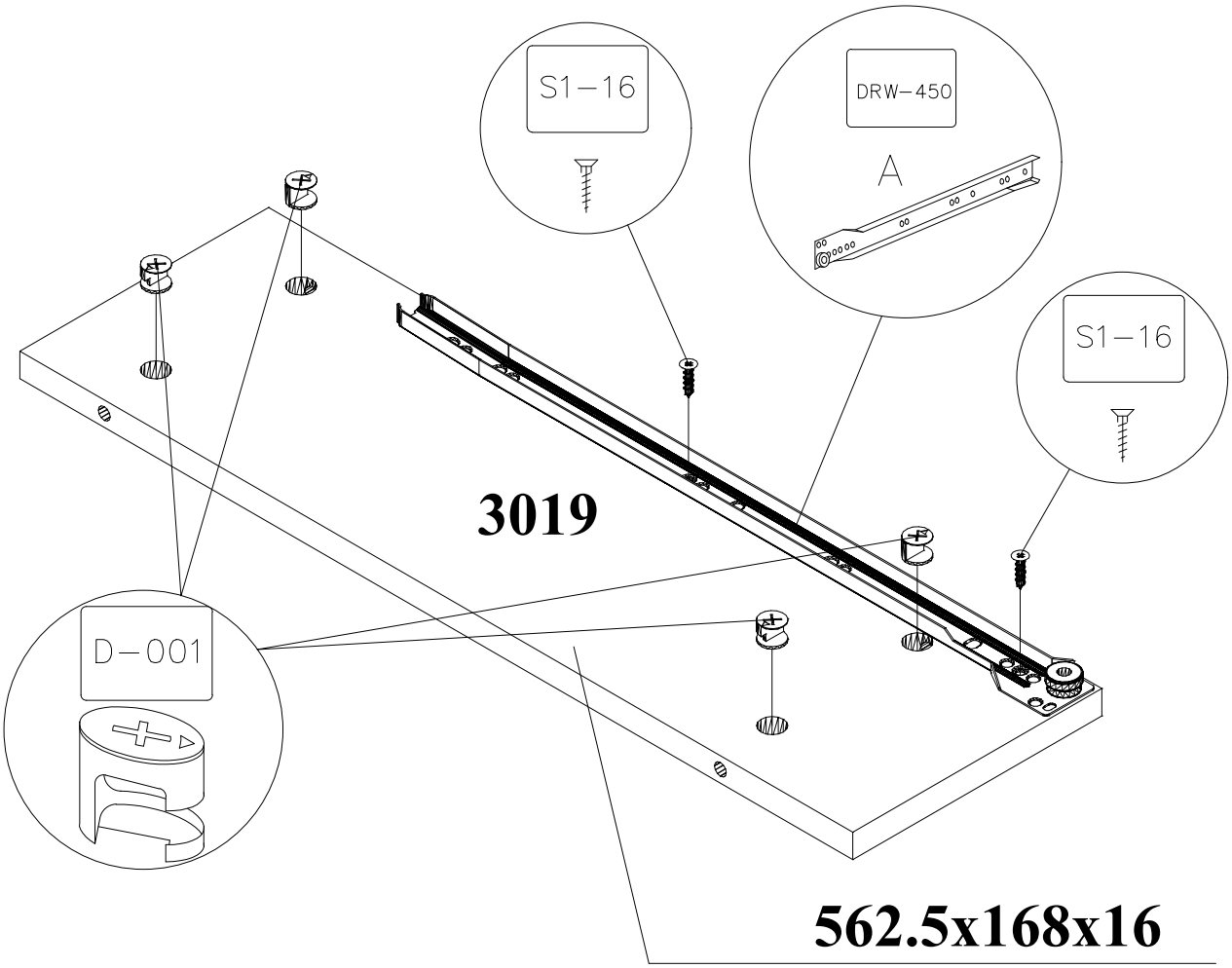
S1−16
DRW−450
A
S1−16
3019
D−001
562.5x168x16

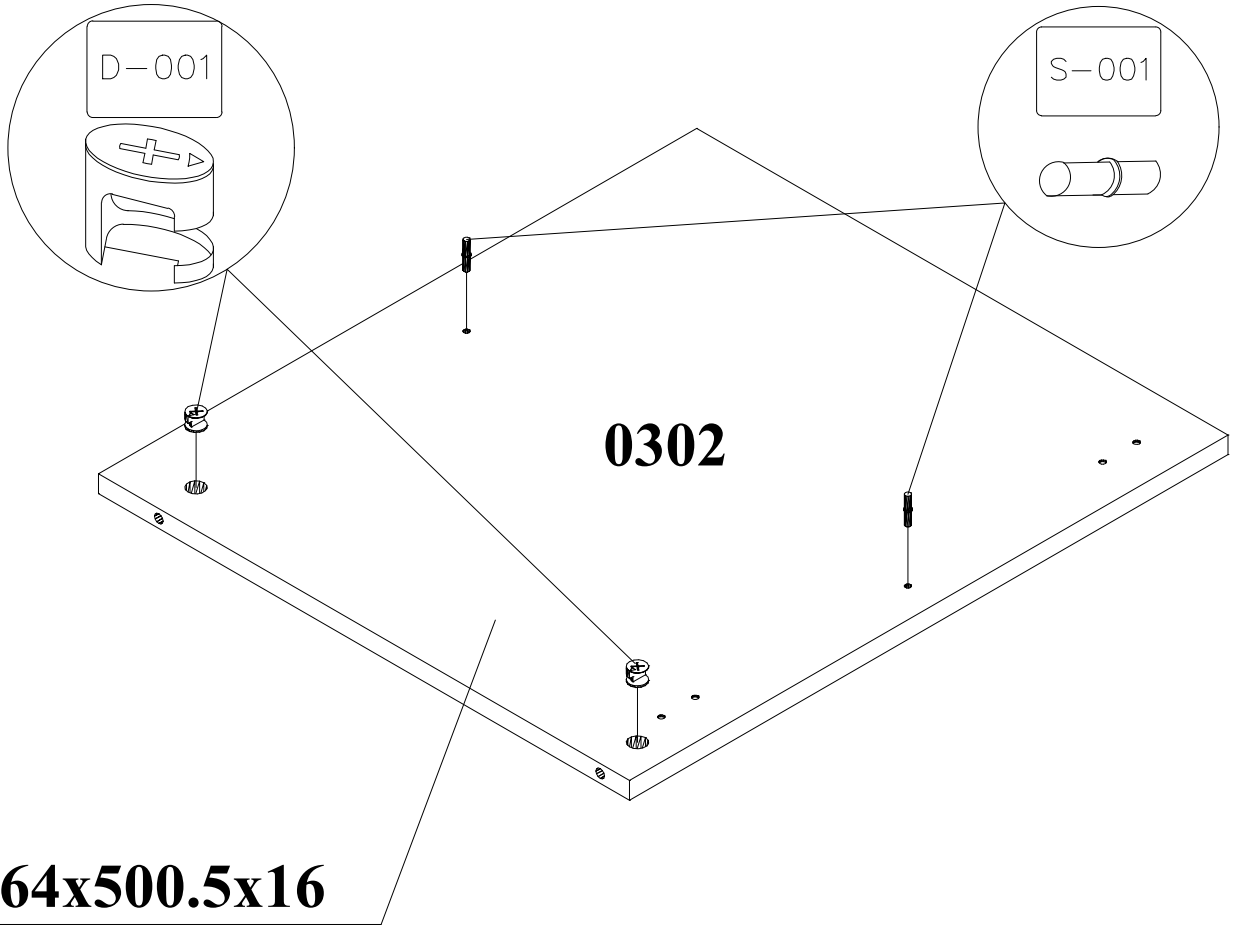
D−001
S−001
0302
564x500.5x16

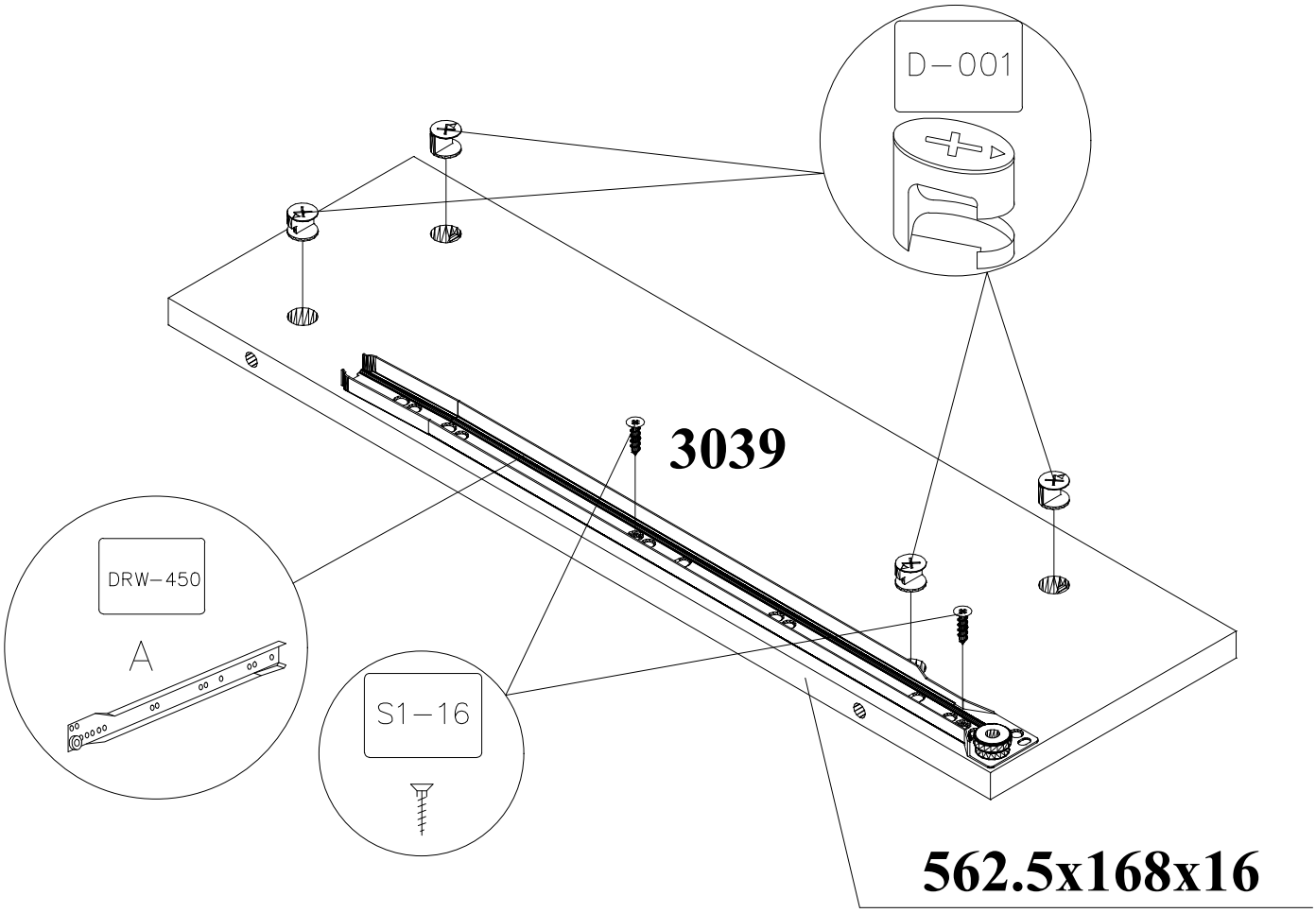
D-001
3039
DRW-450
A
S1-16
562.5x168x16

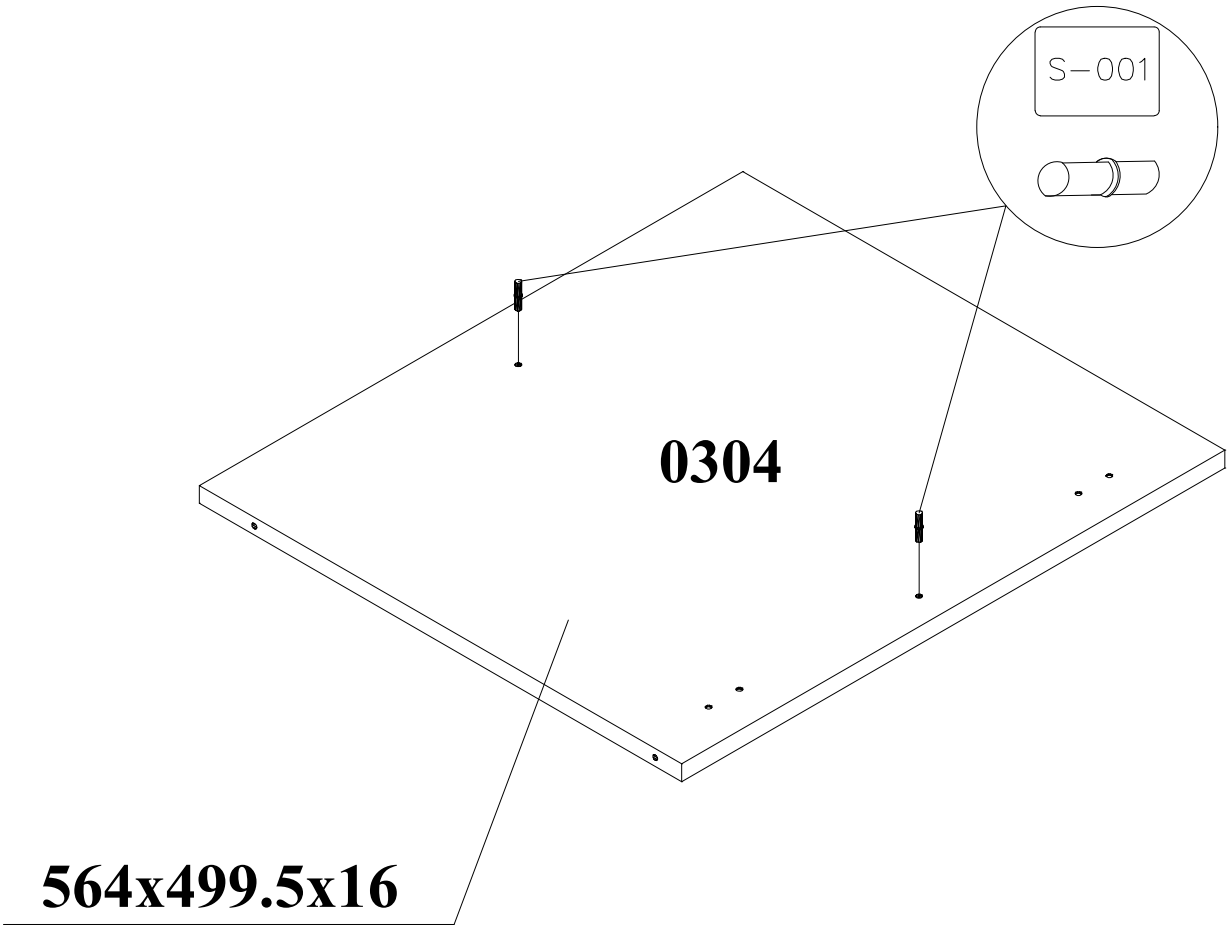
S-001
0304
564x499.5x16

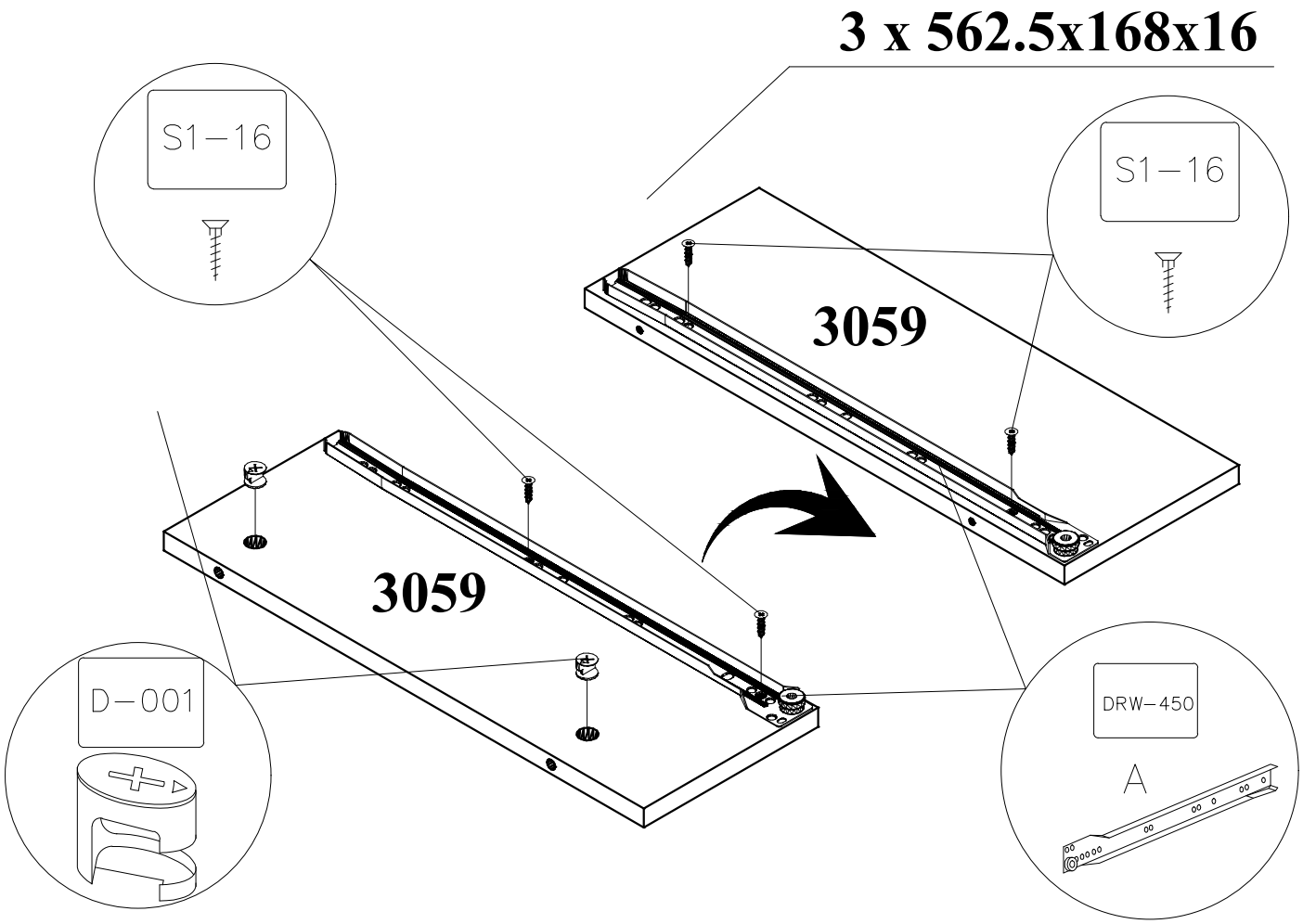
3 x 562.5x168x16
S1-16
S1-16
3059
3059
D-001
DRW-450
A

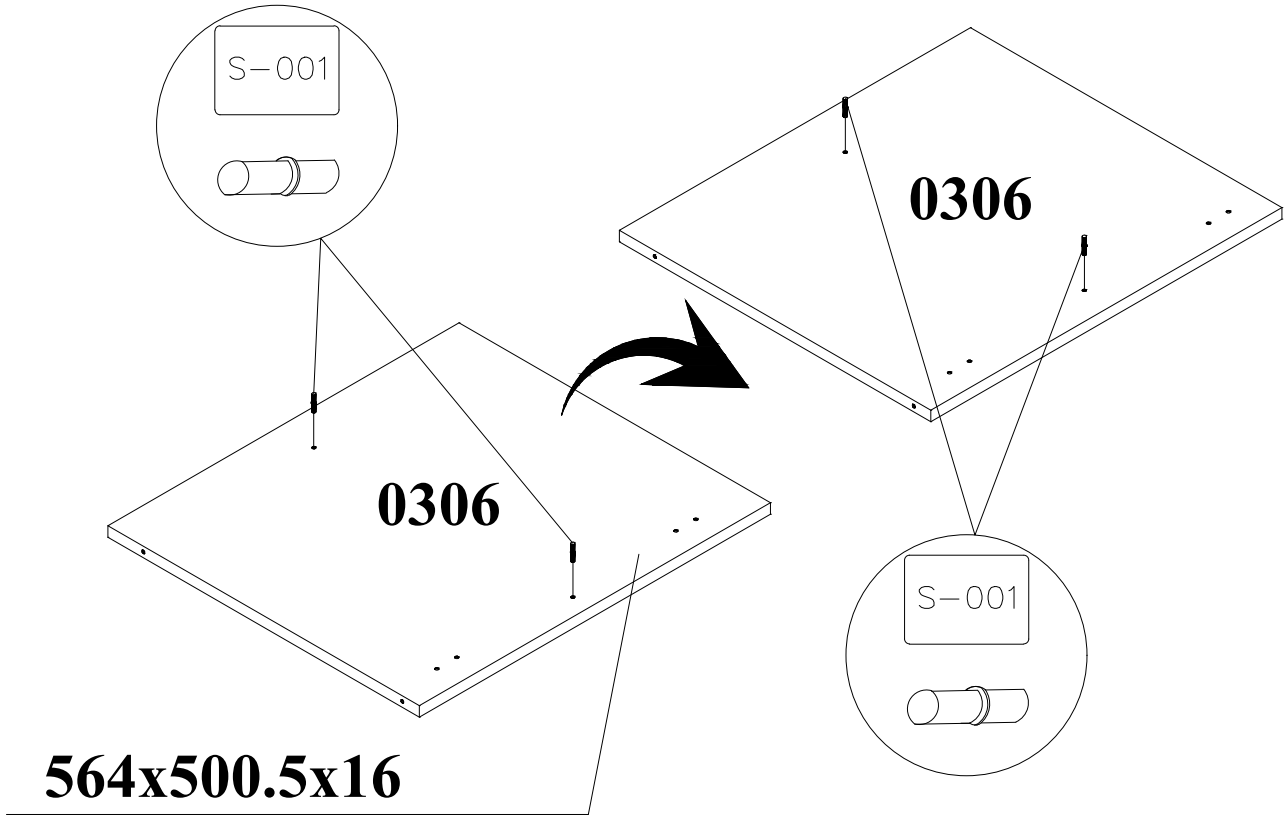
S-001
0306
0306
S-001
564x500.5x16

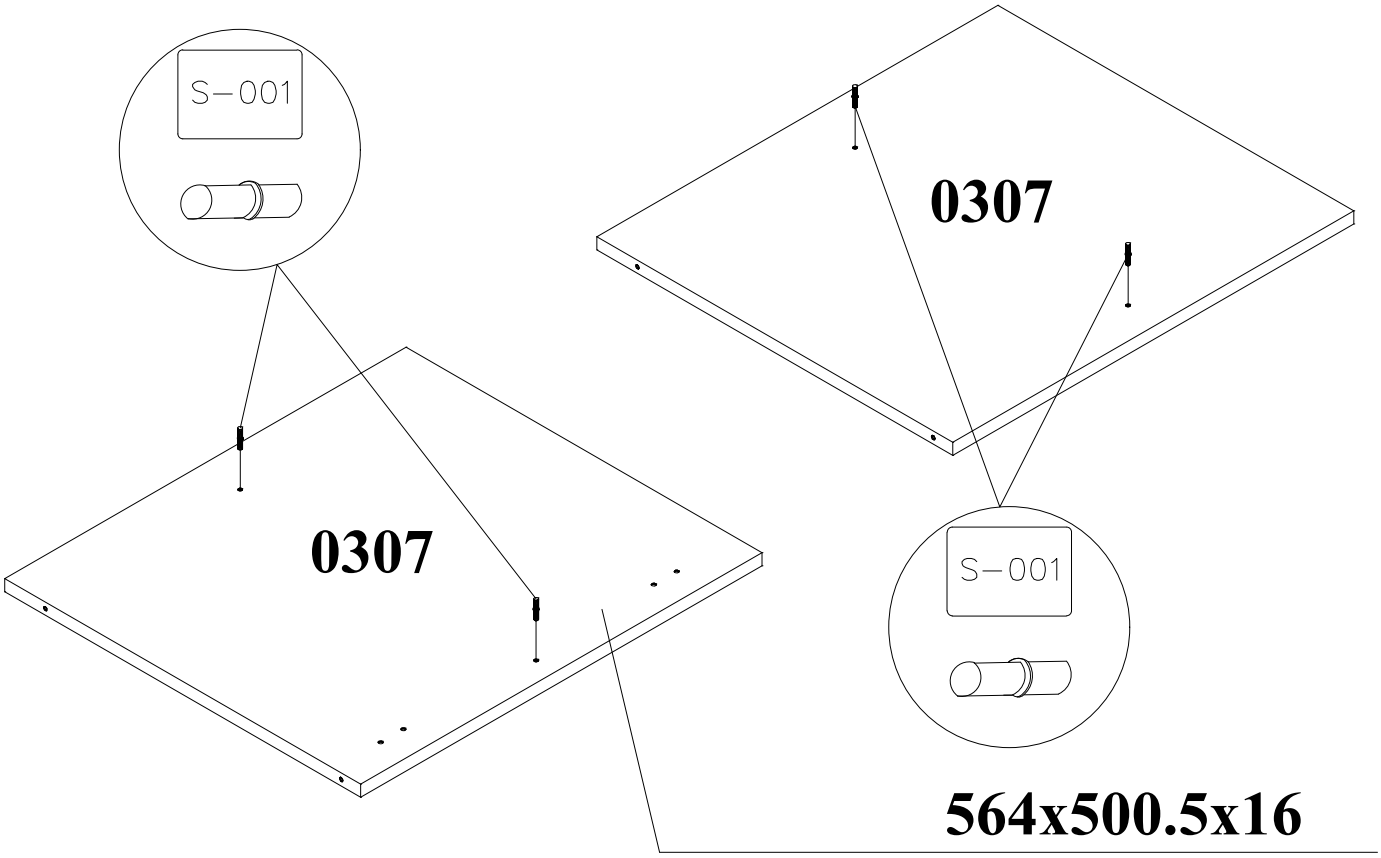
S-001
0307
0307
S-001
564x500.5x16

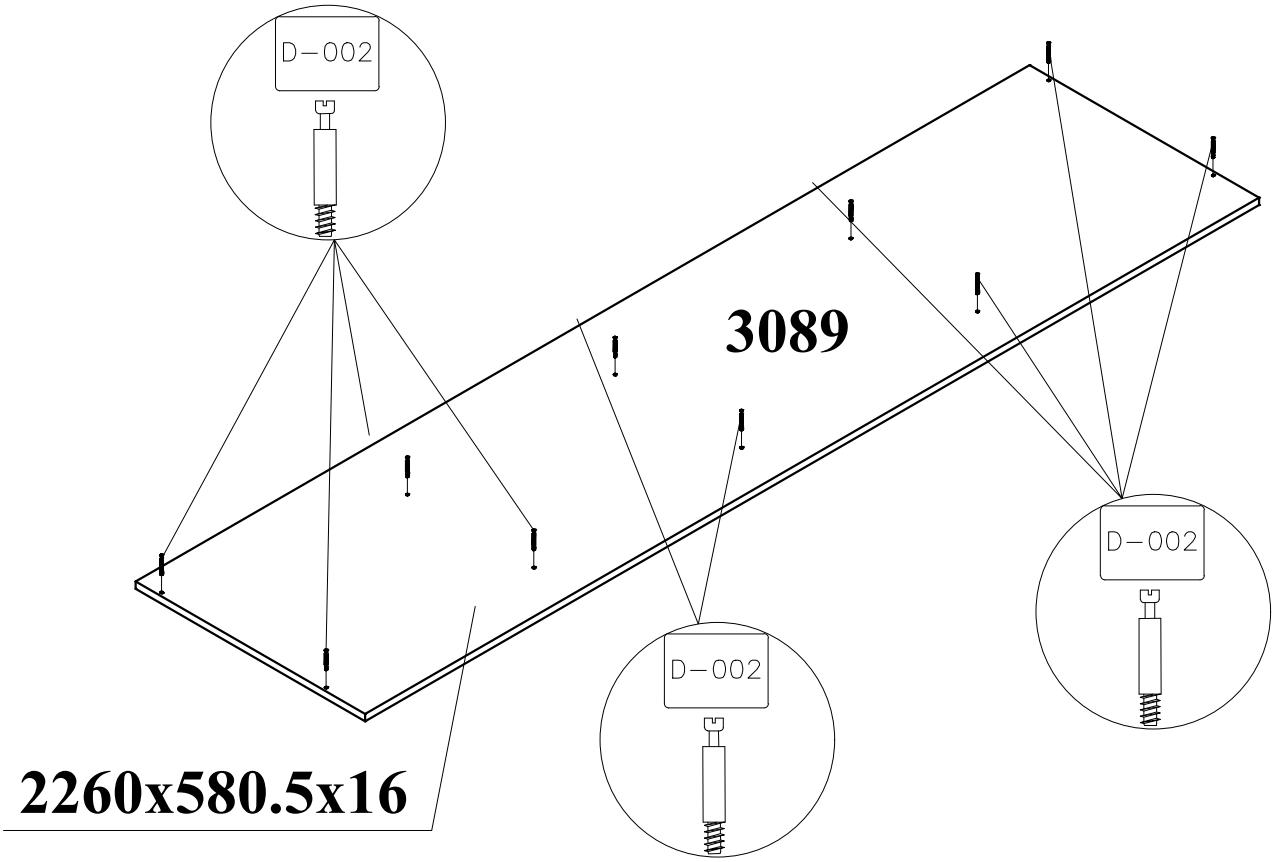
D-002
3089
D-002
D-002
2260x580.5x16

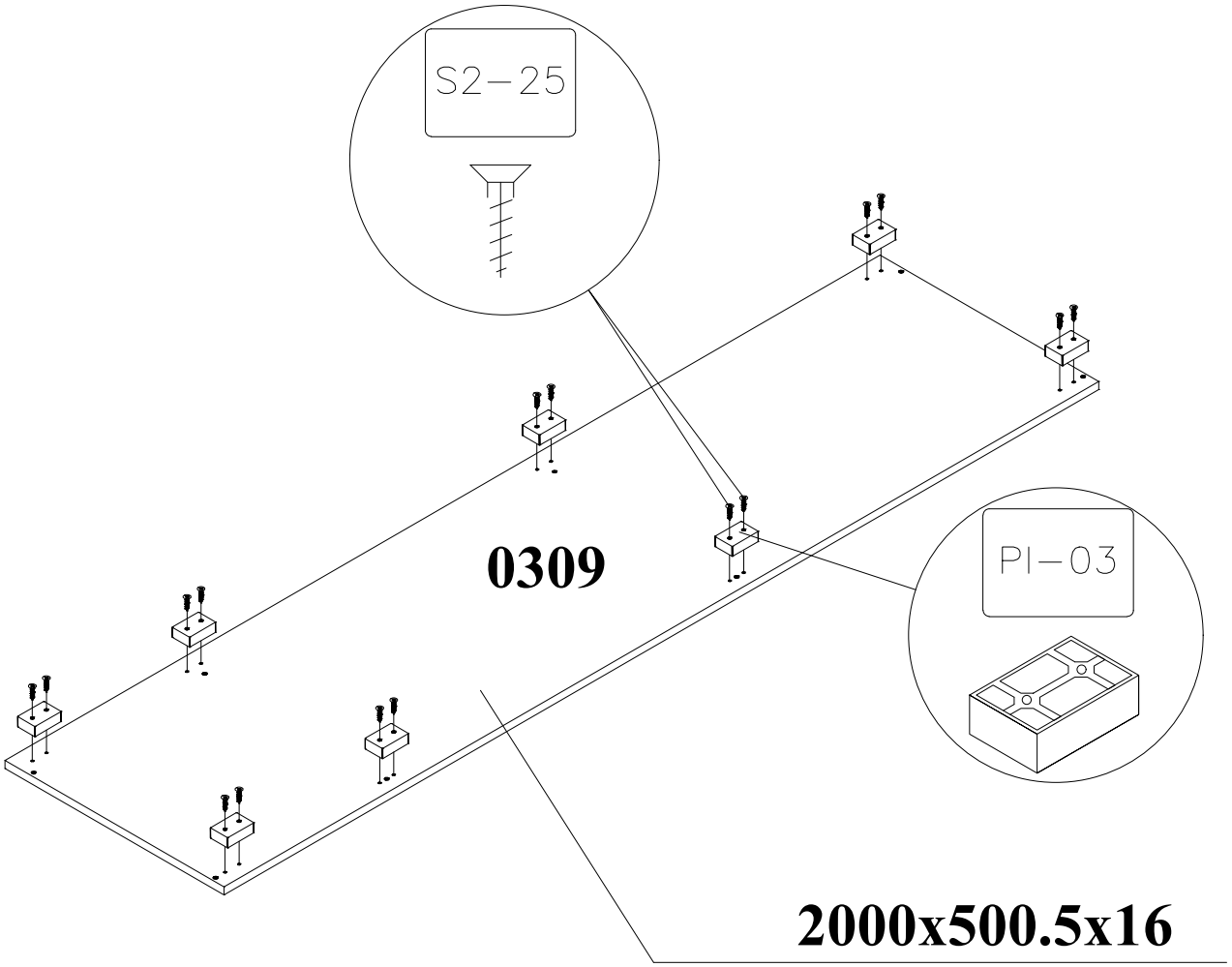
S2-25
PI-03
0309
2000x500.5x16

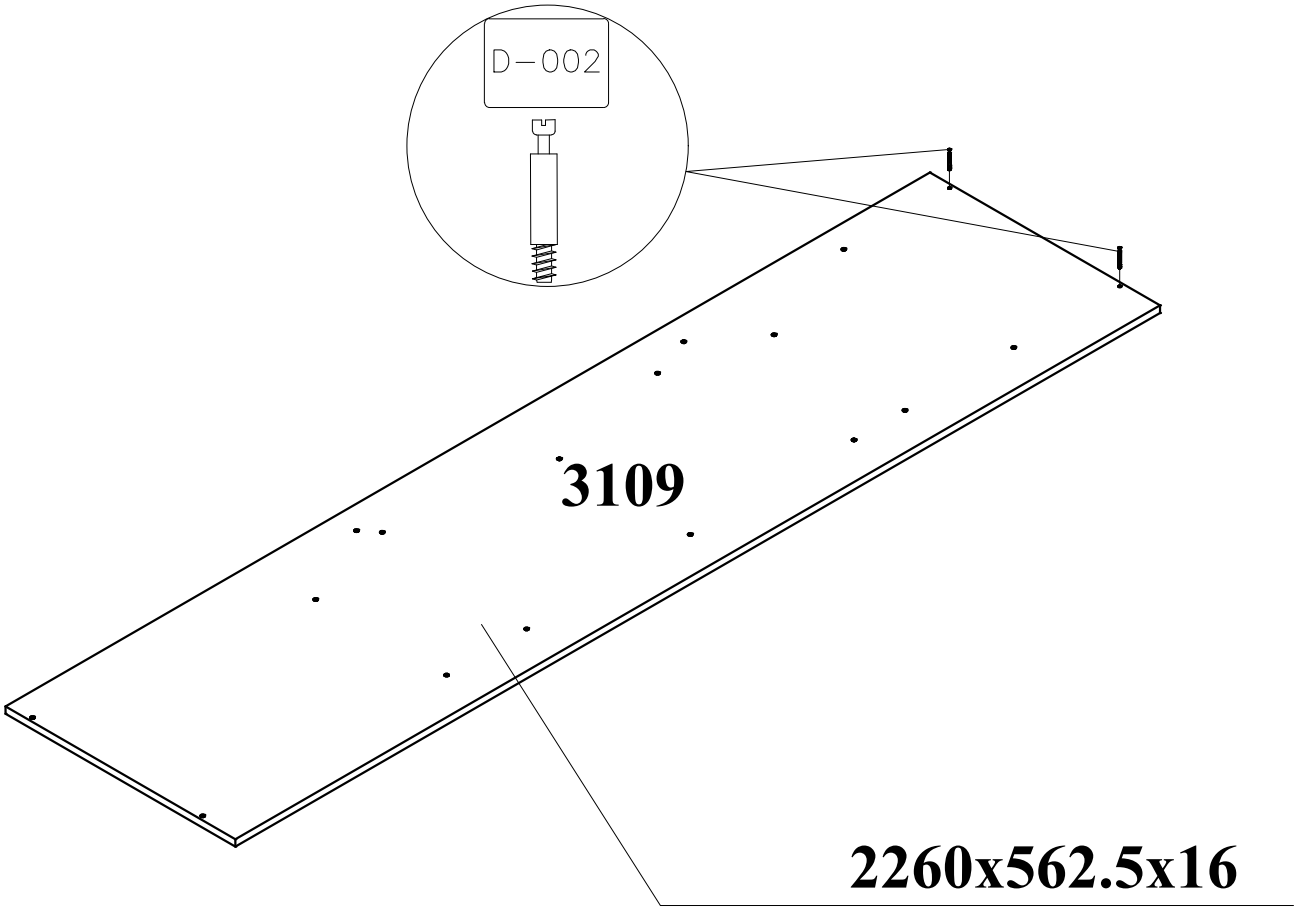
D-002
3109
2260x562.5x16

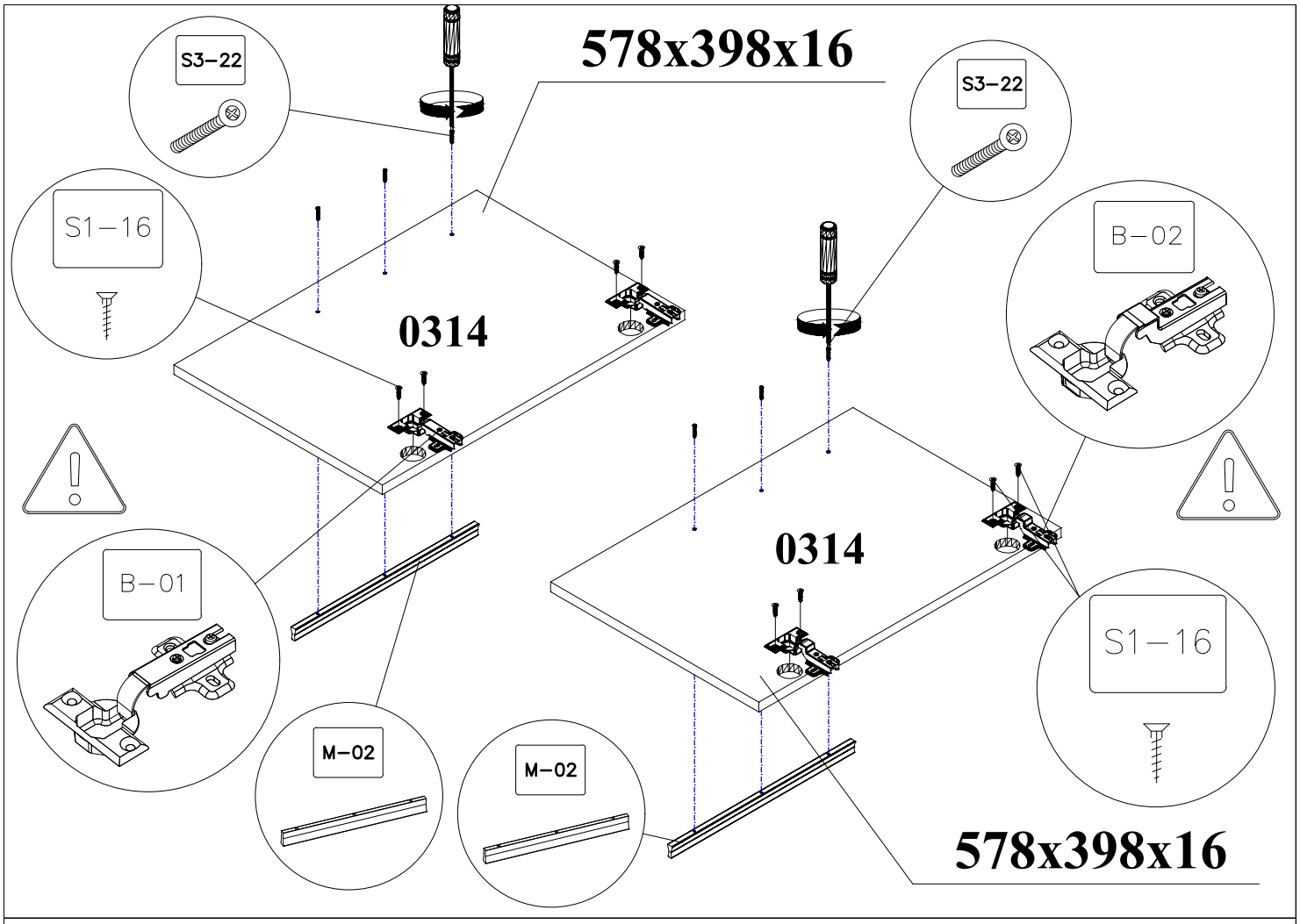
578x398x16
S3–22
S1–16
0314
B–01
M–02
M–02
0314
S3–22
B–02
S1–16
578x398x16

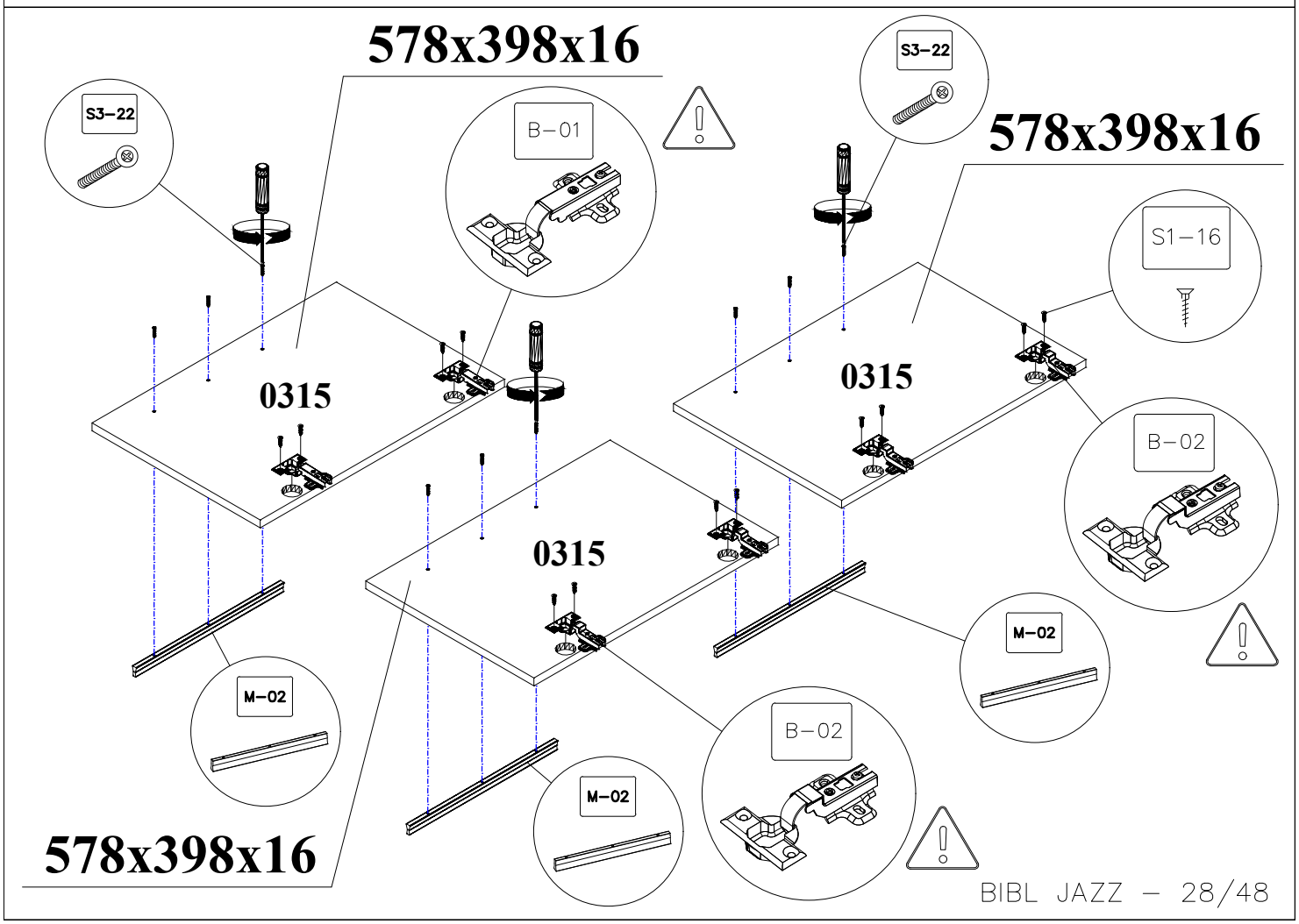
578x398x16
S3–22
B–01
0315
M–02
578x398x16
0315
B–02
M–02
S3–22
578x398x16
S1–16
0315
B–02
M–02

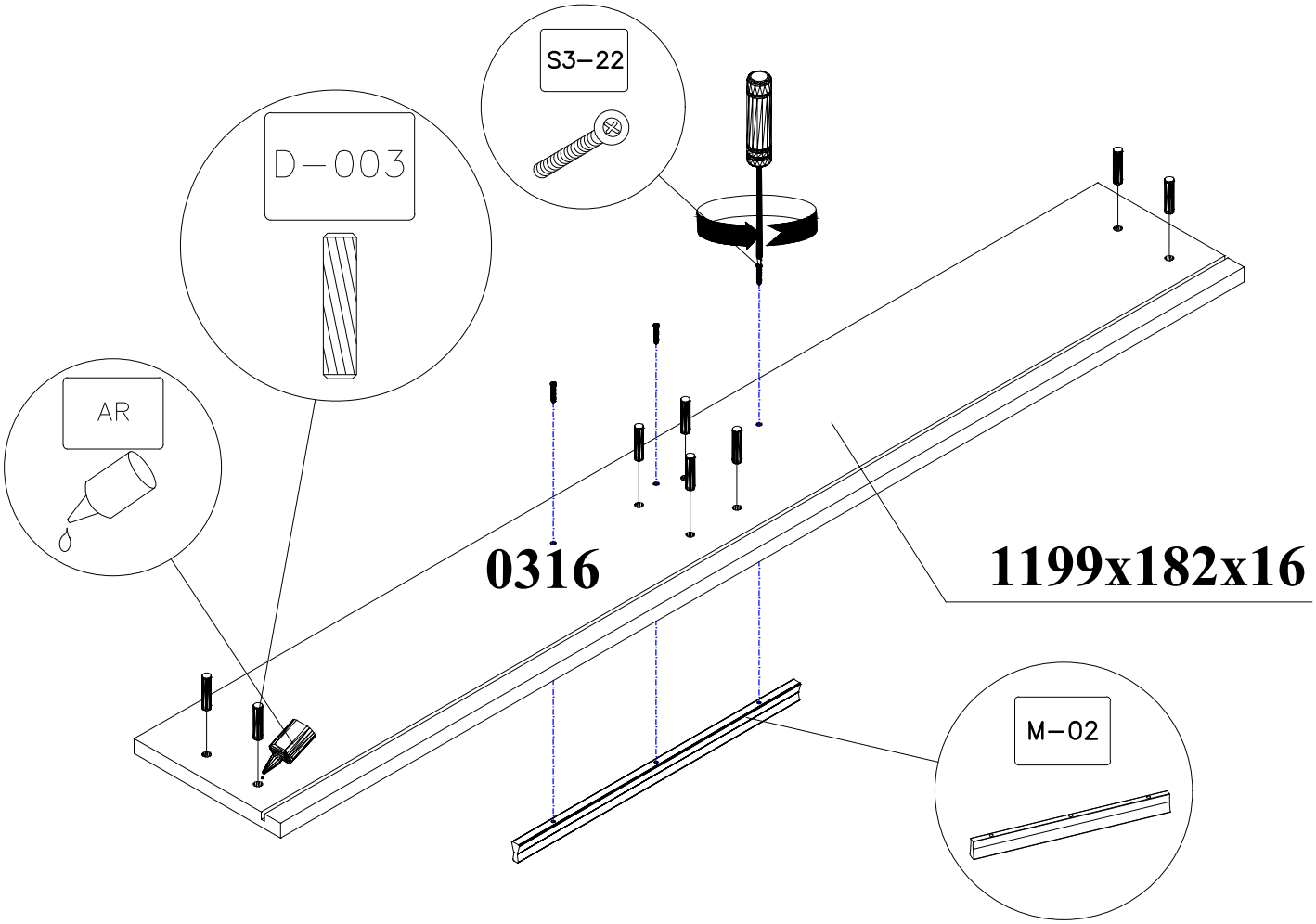
S3–22
D–003
AR
0316
1199x182x16
M–02

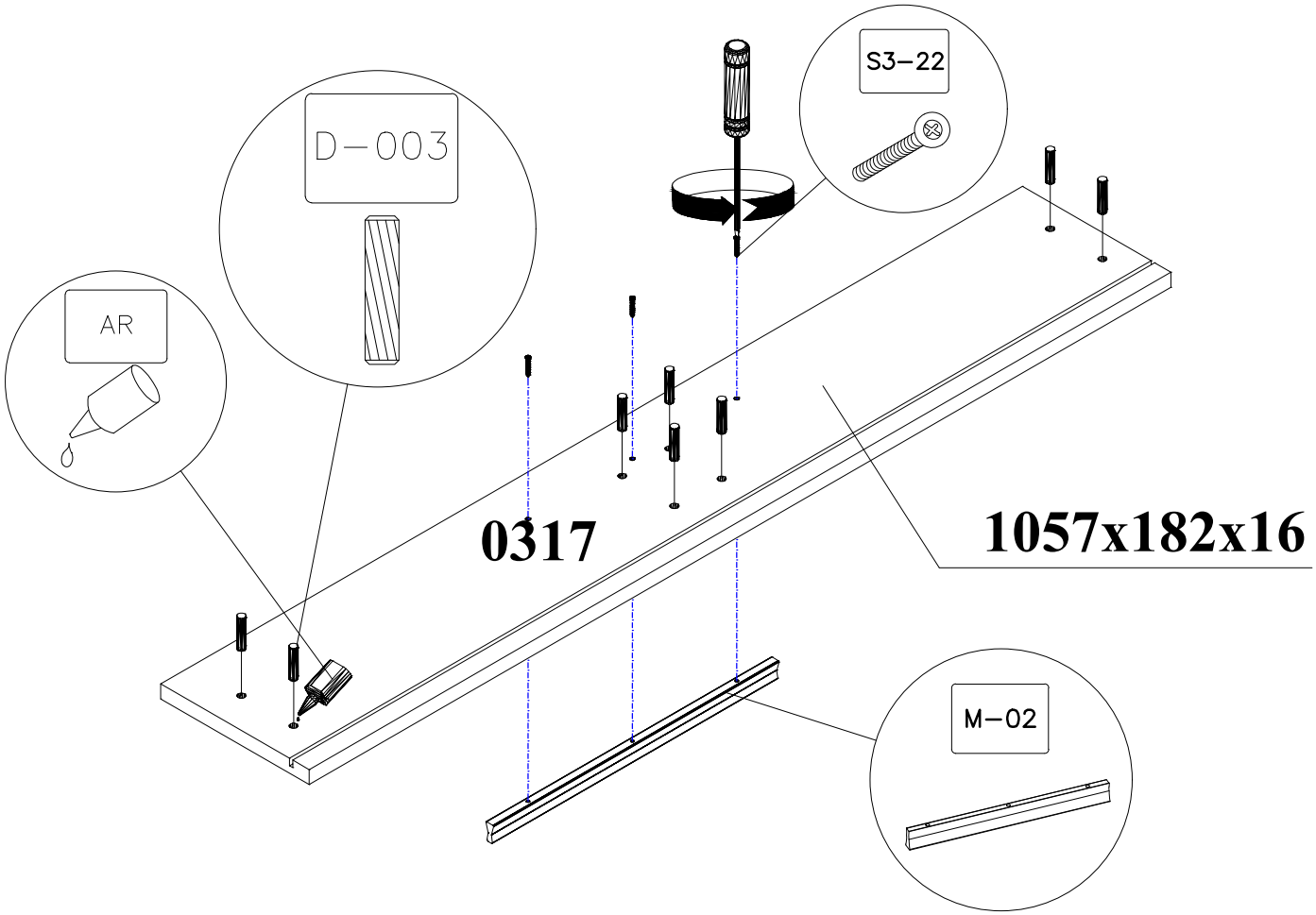
S3–22
D–003
AR
0317
1057x182x16
M–02

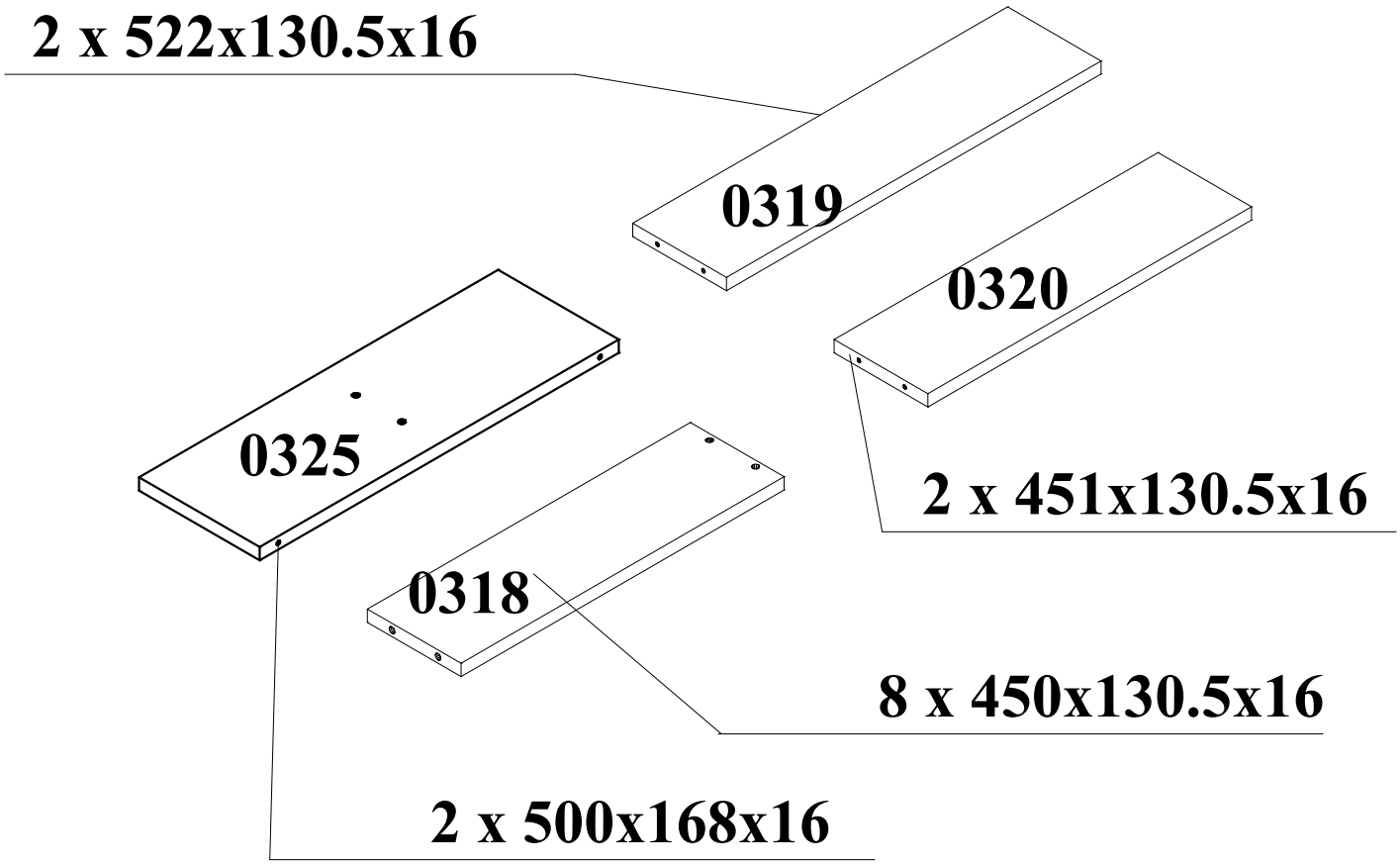
2 x 522x130.5x16
0319
0320
0325
2 x 451x130.5x16
0318
8 x 450x130.5x16
2 x 500x168x16

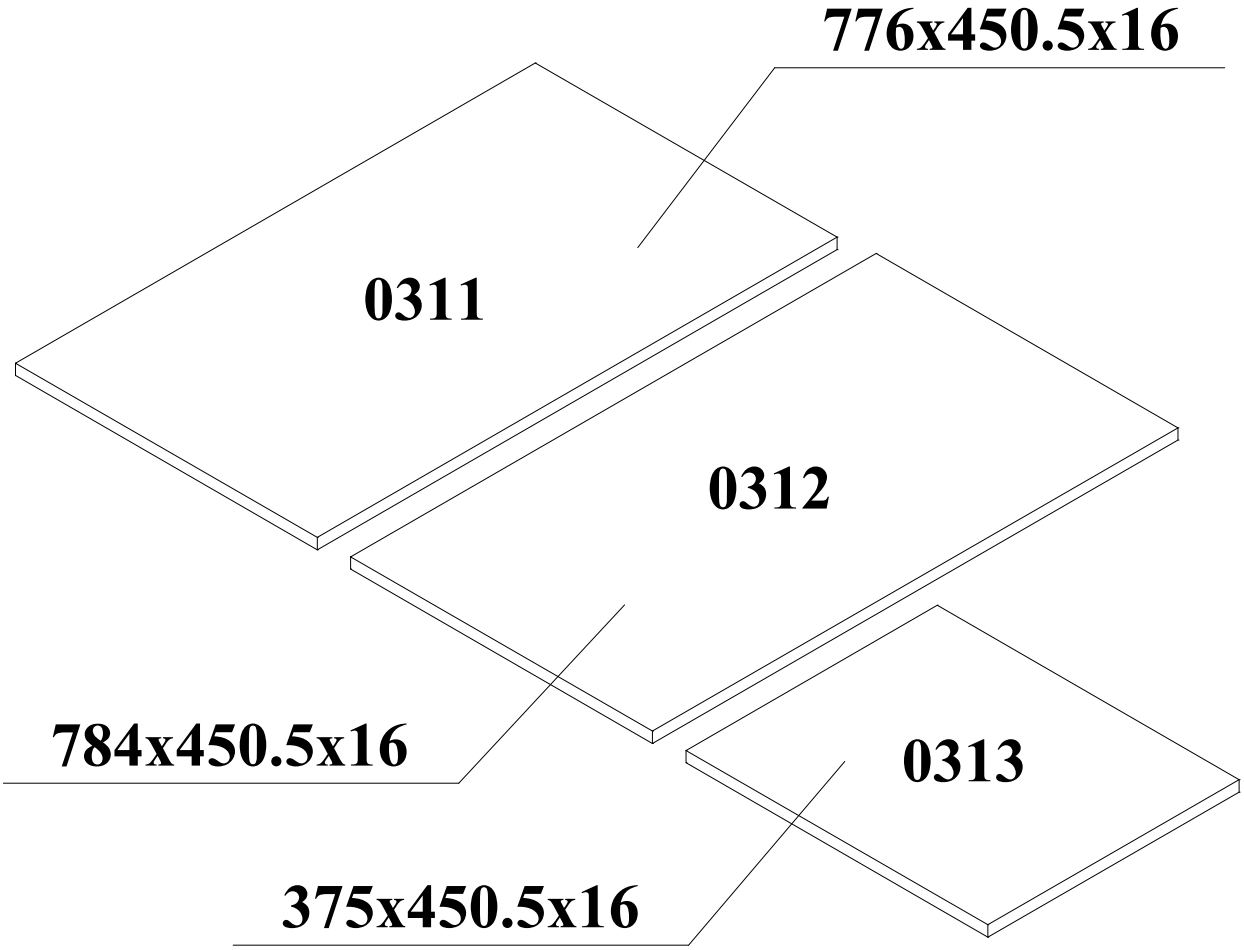
776x450.5x16
0311
0312
784x450.5x16
0313
375x450.5x16

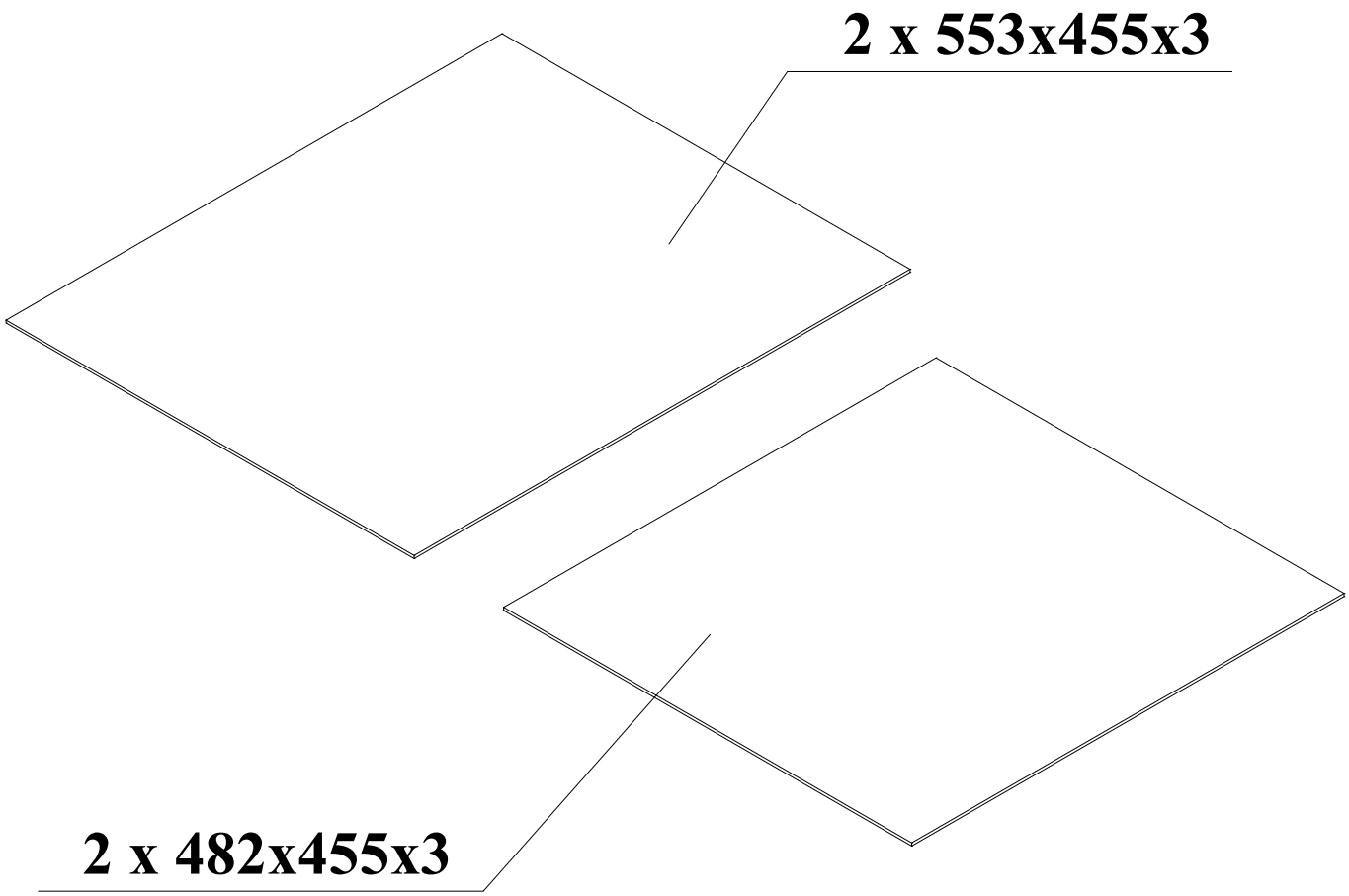
2 x 553x455x3
2 x 482x455x3

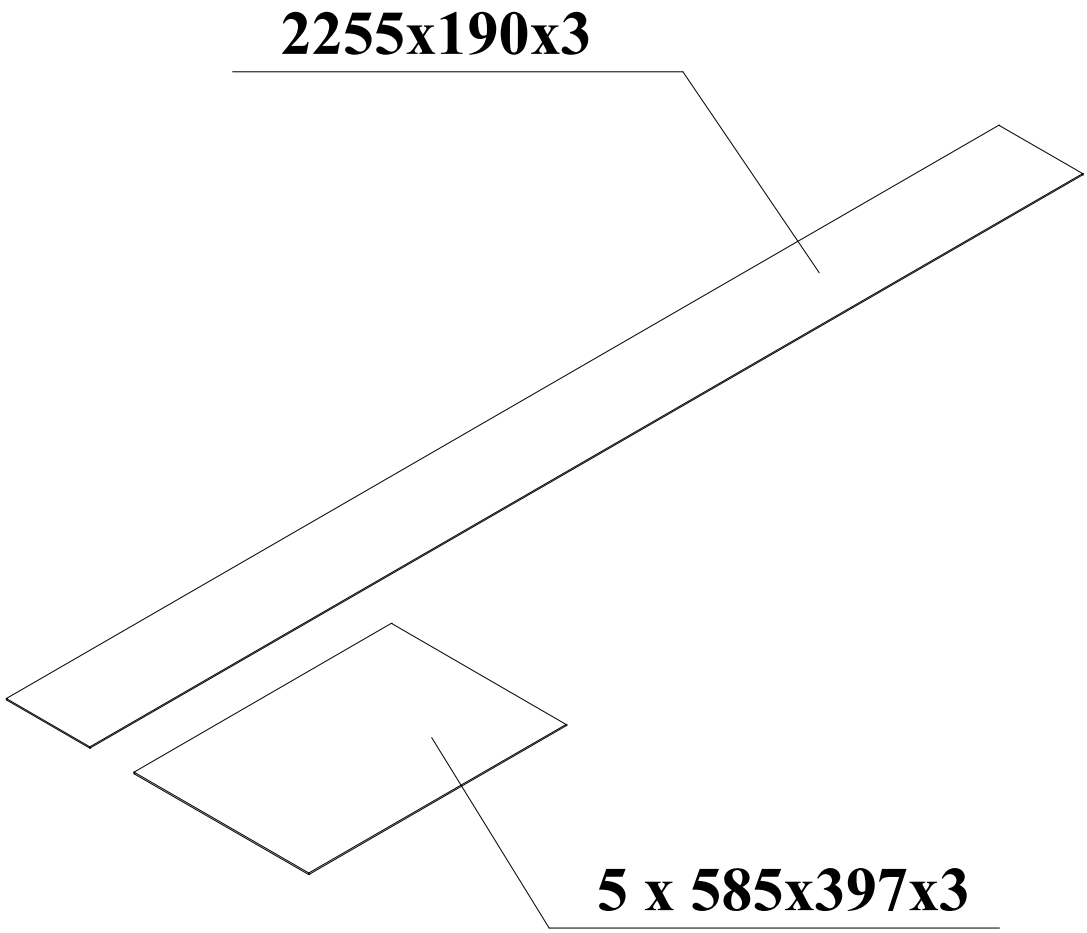
2255x190x3
5 x 585x397x3

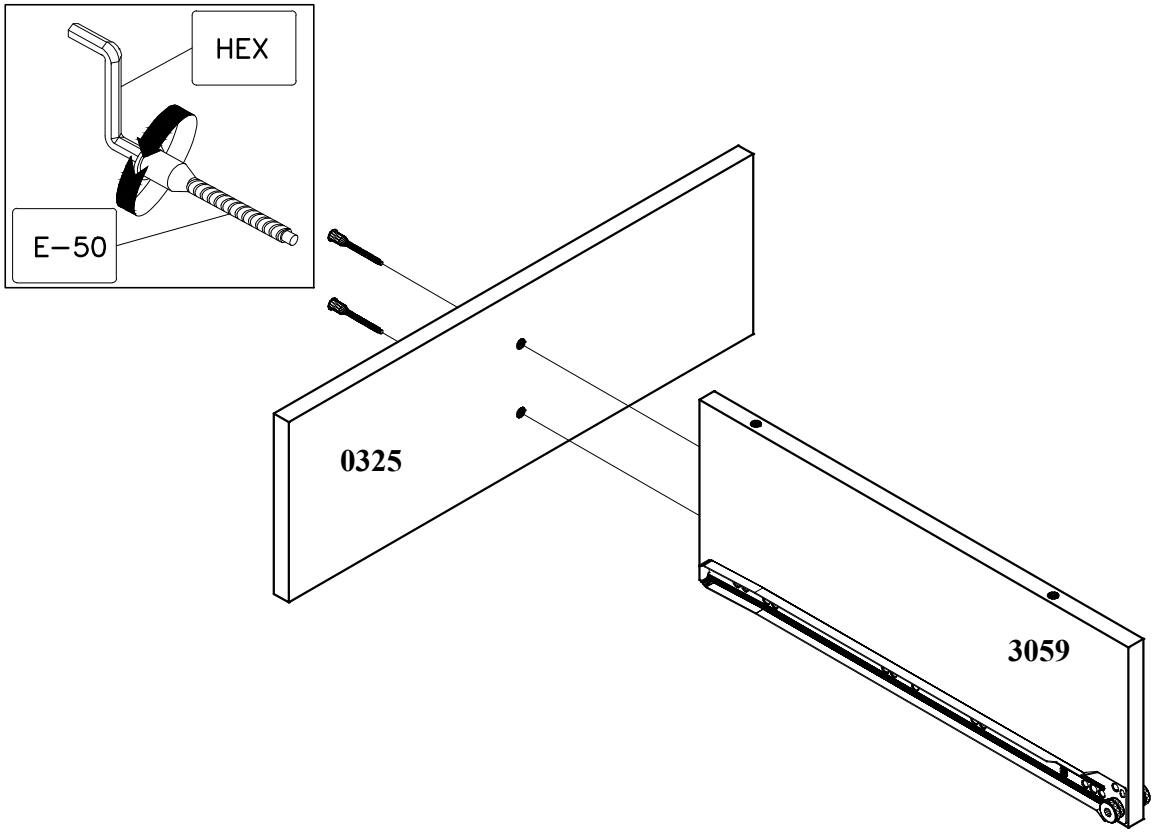
HEX
E-50
0325
3059

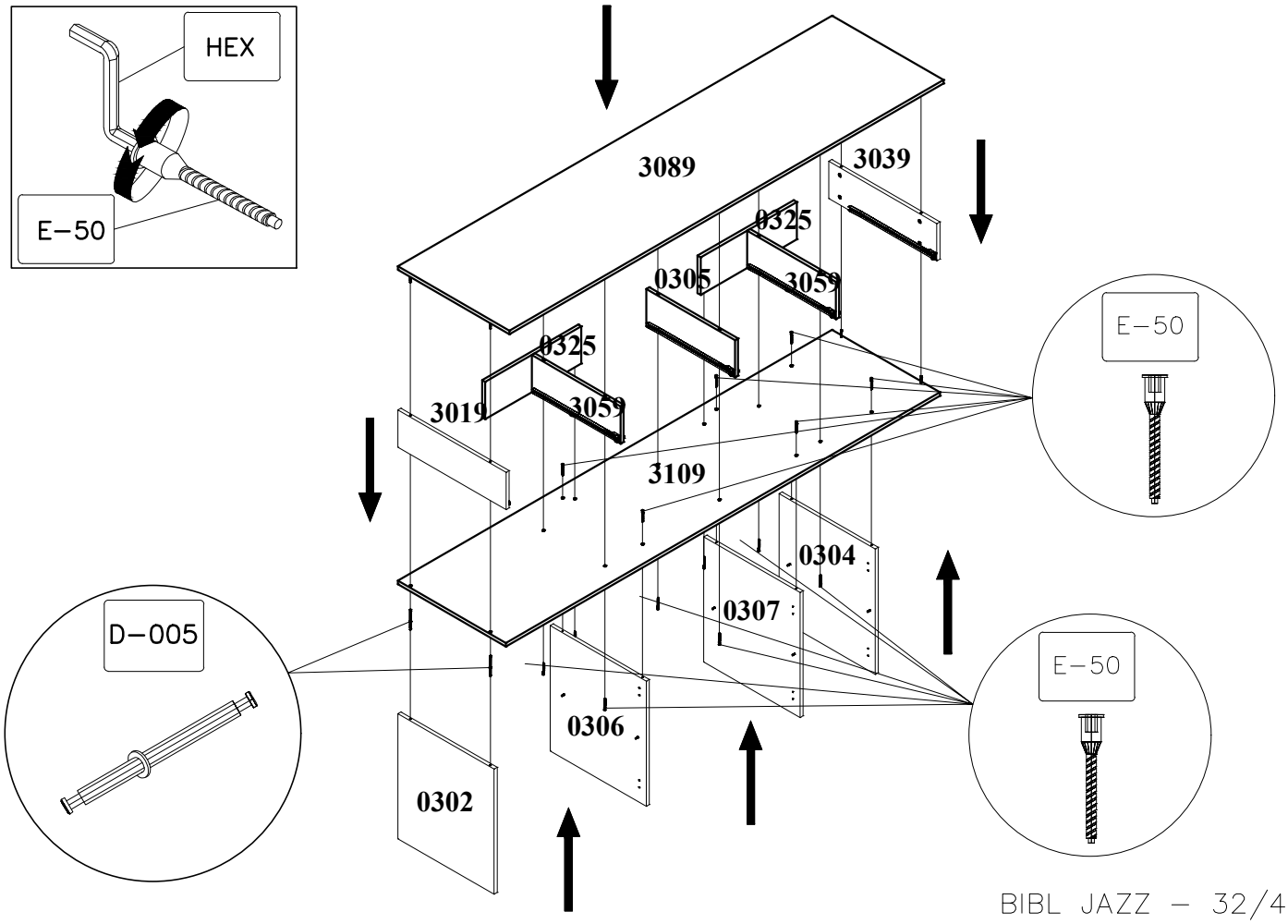
HEX
E-50
3089
3039
0325
0305
3059
0325
3019
3059
3109
E-50
0304
0307
D-005
E-50
0306
0302

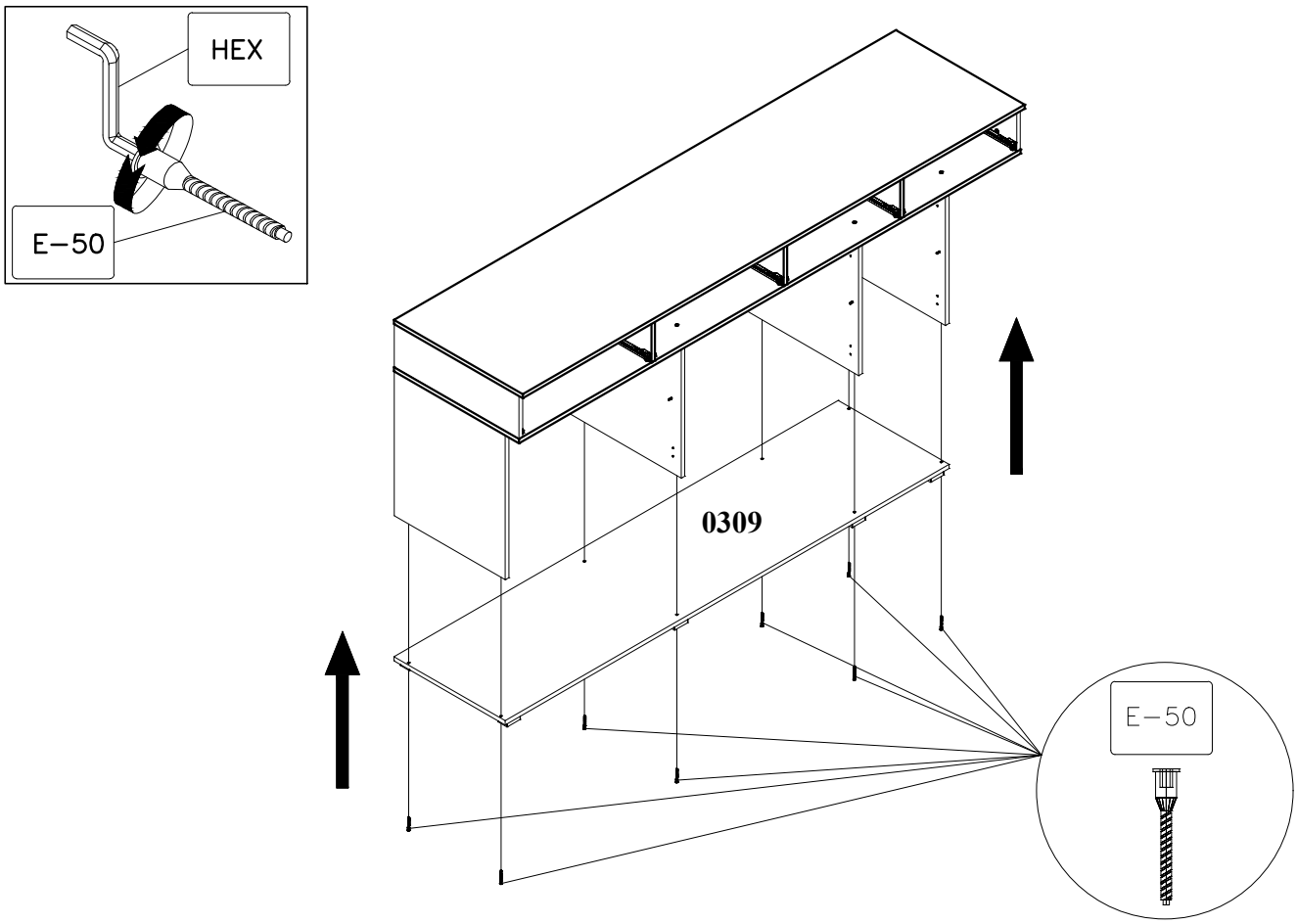
HEX
E-50
0309
E-50

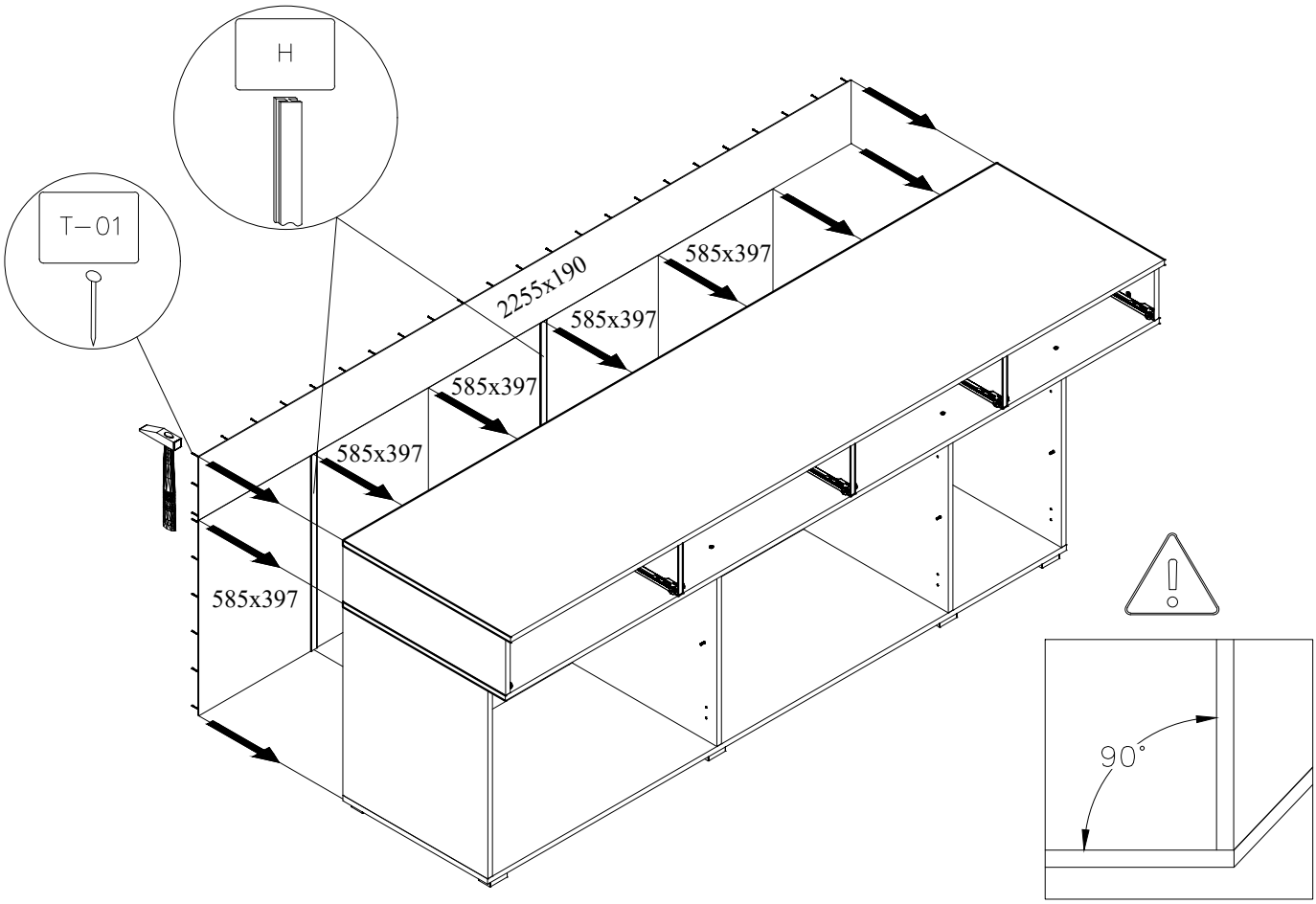
H
T-01
2255x190
585x397
585x397
585x397
585x397
585x397
90°

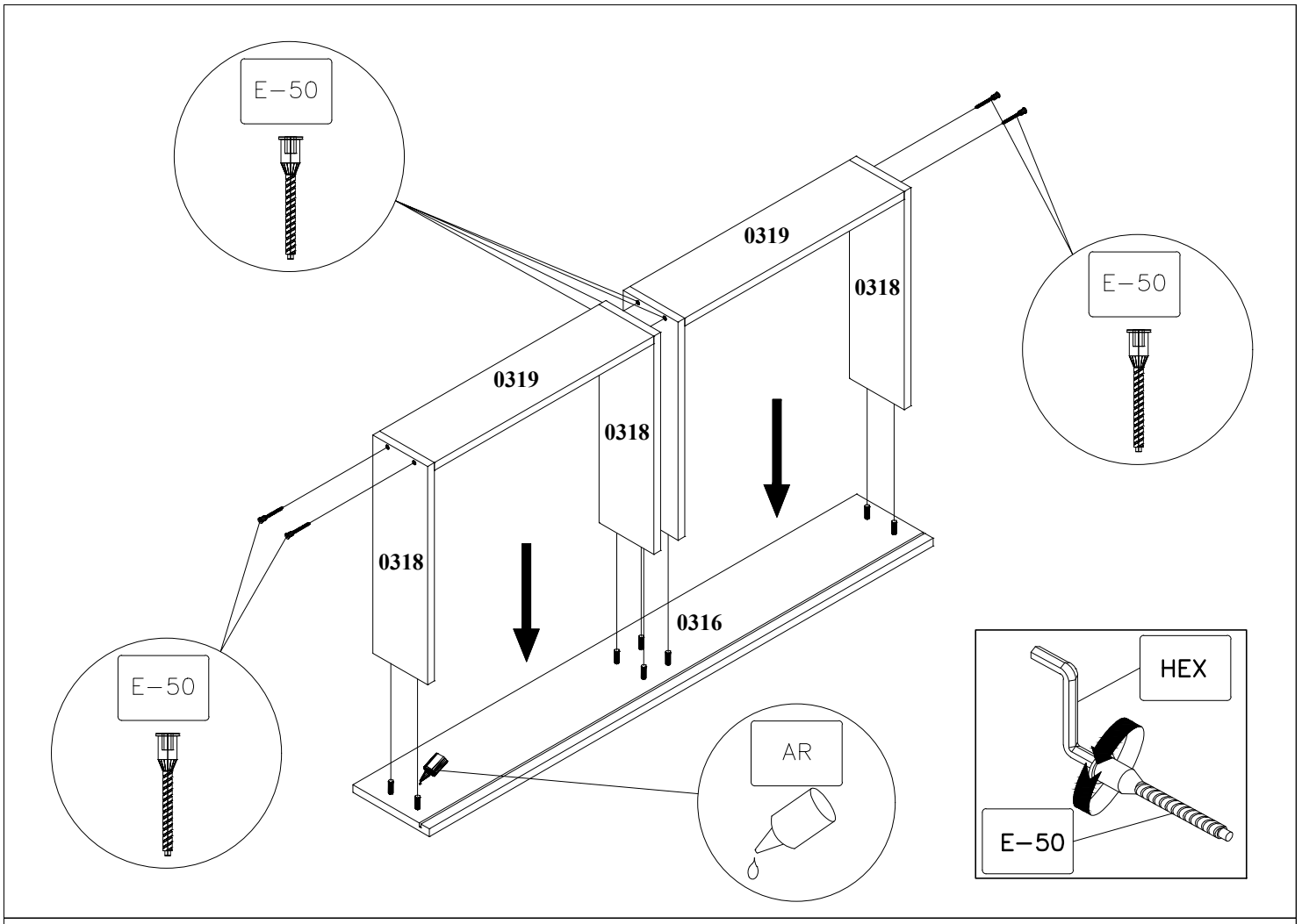
E-50
0319
0318
E-50
0319
0318
0318
0316
E-50
AR
HEX
E-50

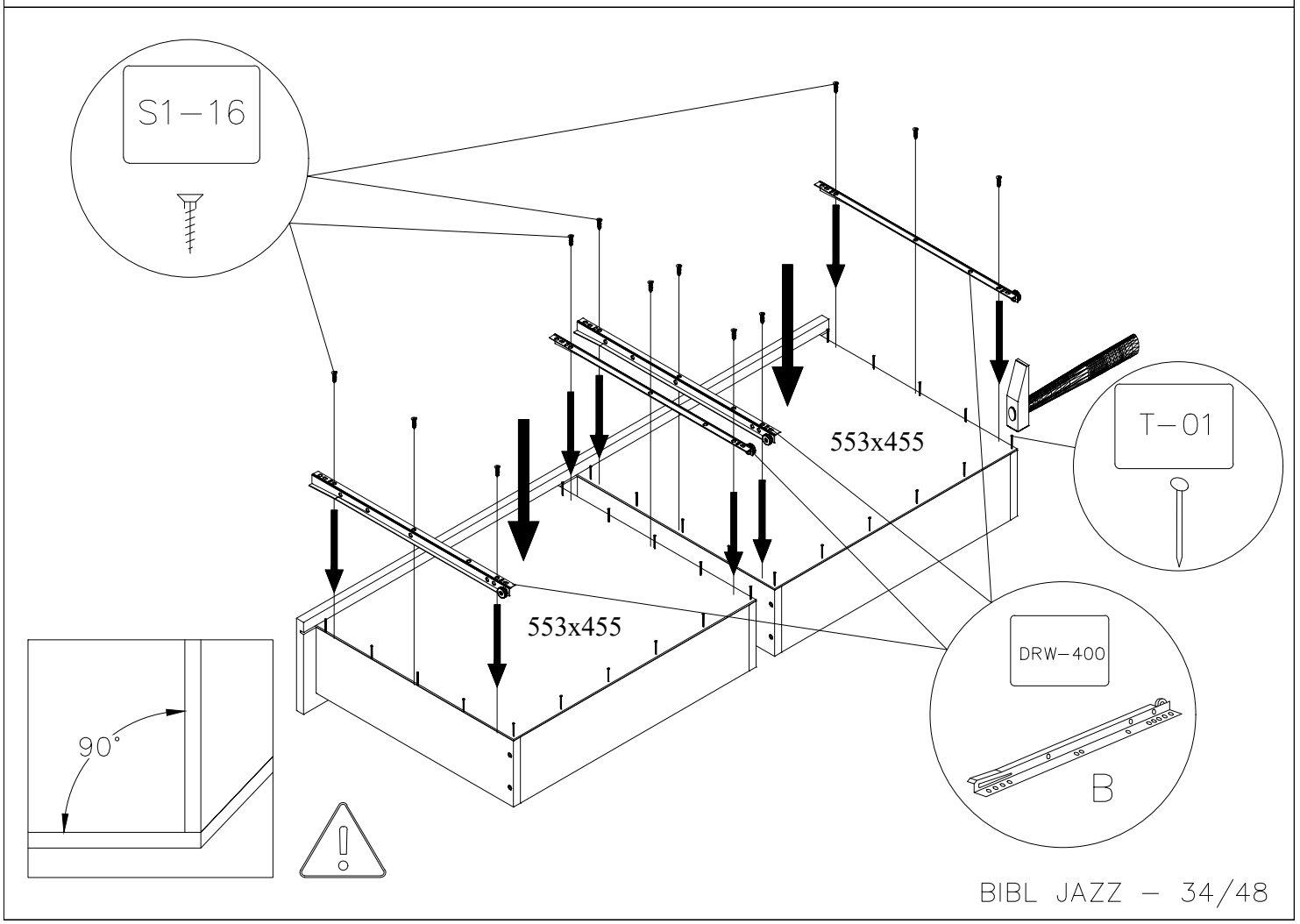
S1-16
553x455
553x455
T-01
DRW-400
B
90°

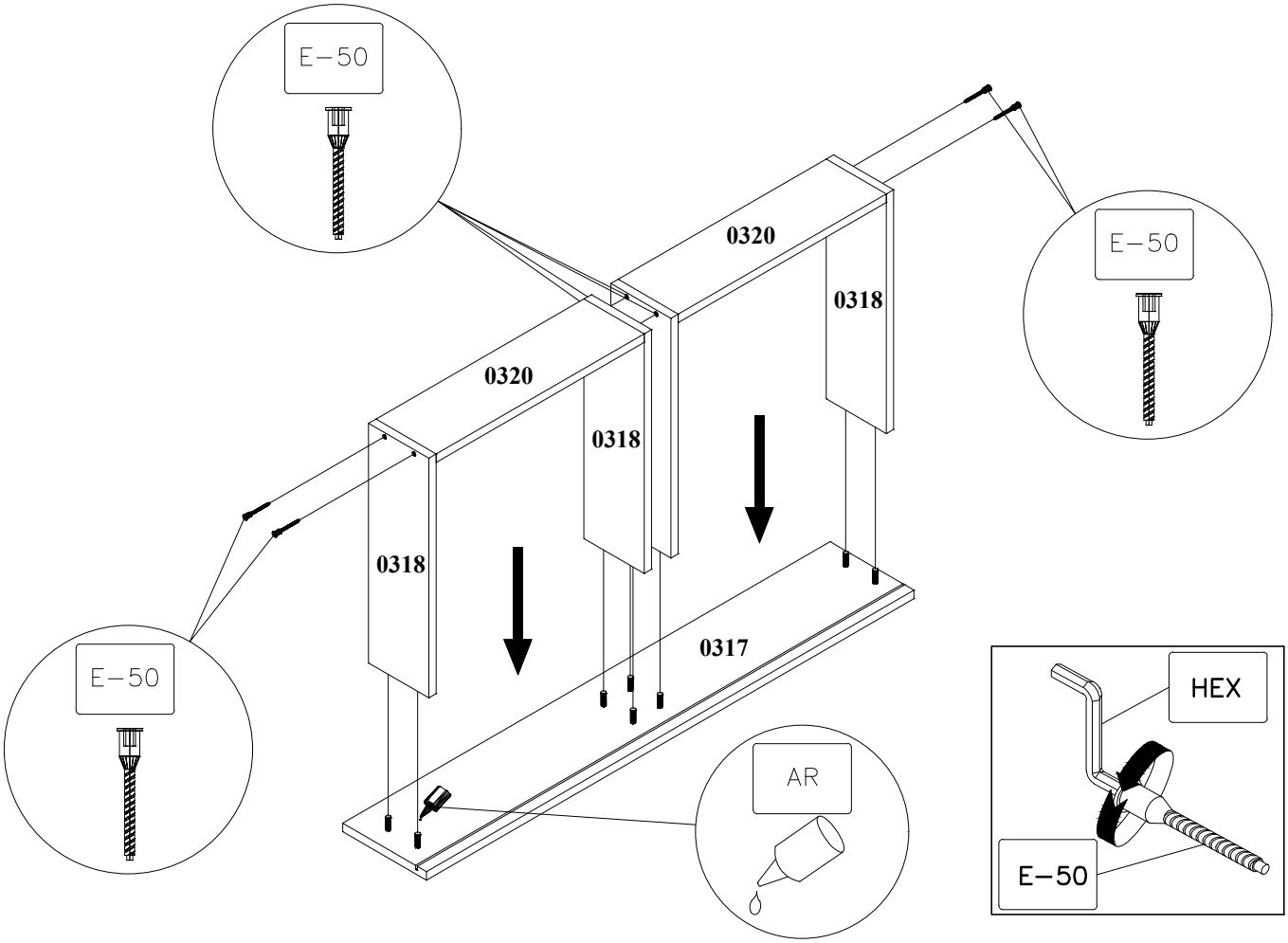
E-50
0320
0318
E-50
0320
0318
0318
0317
E-50
AR
HEX
E-50

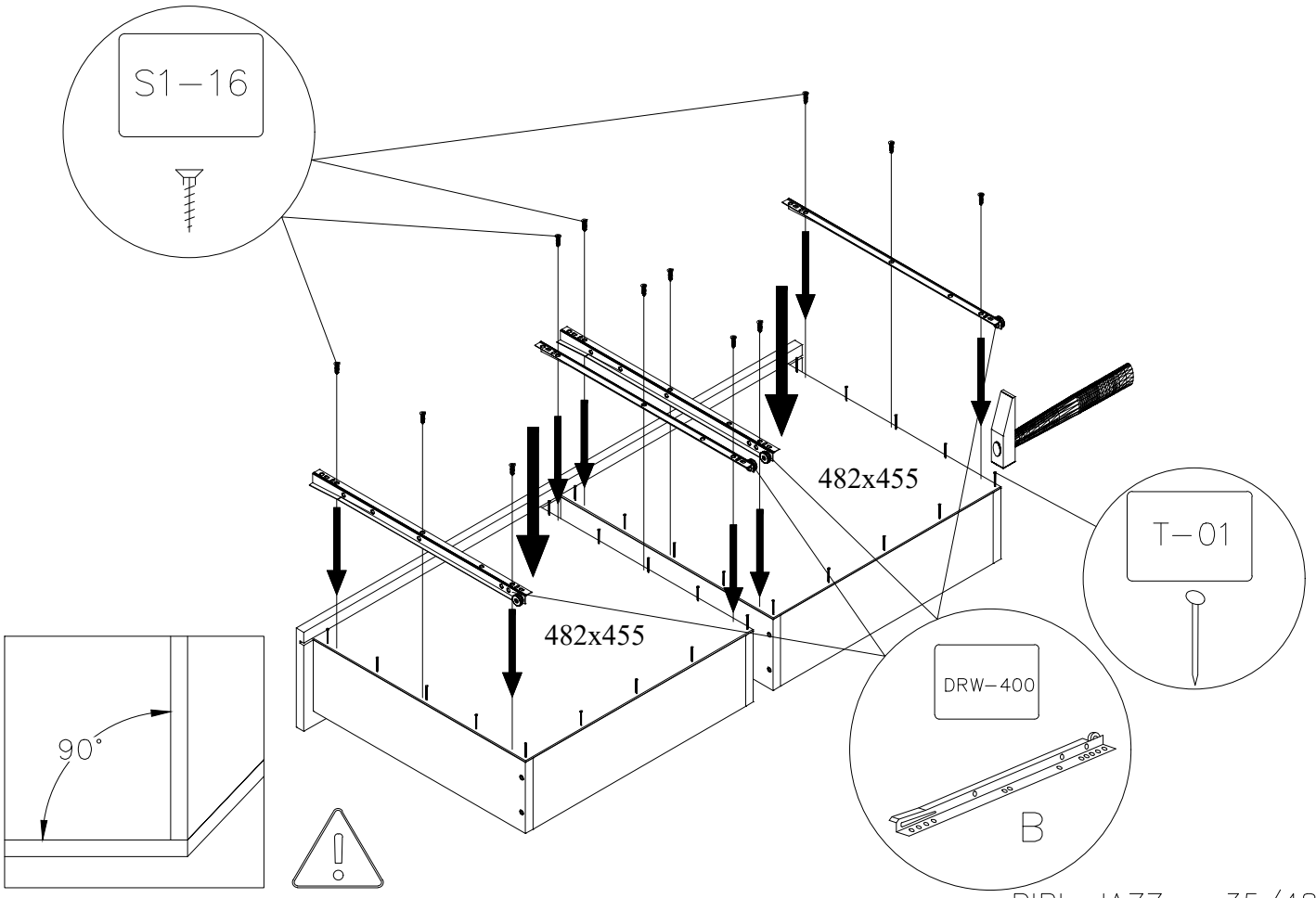
S1-16
482x455
482x455
T-01
DRW-400
B
90°

Assembly instructions
Instructiuni de montaj

PRODUCT : LIVING JAZZ – BOOKSTAND
PRODUS: BIBL JAZZ – ETAJERA

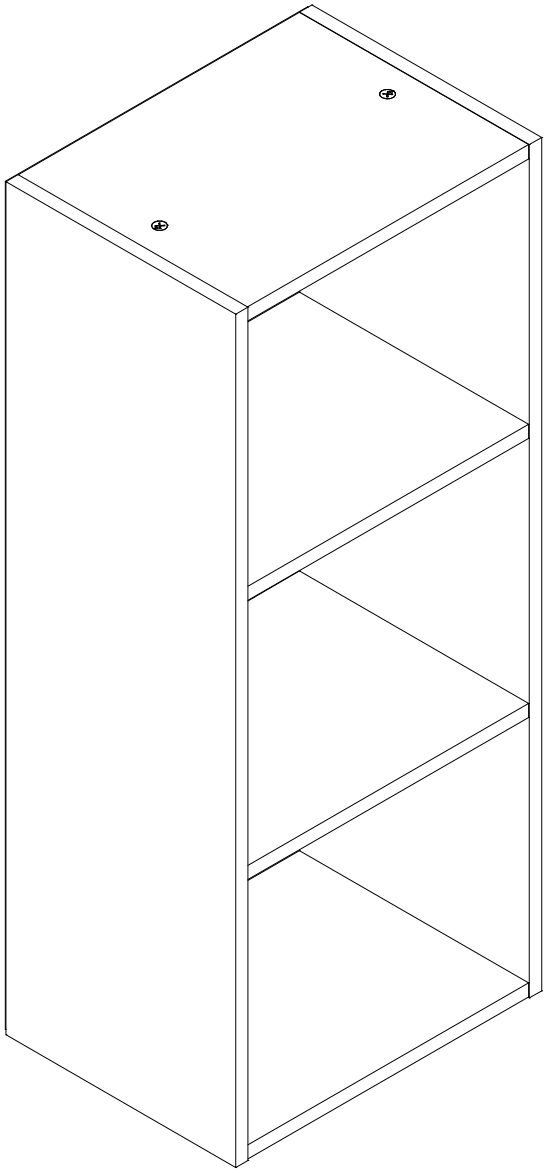

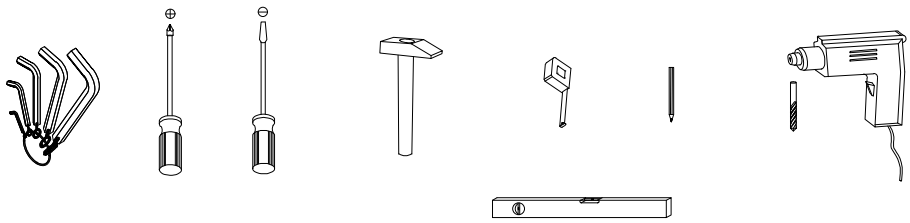

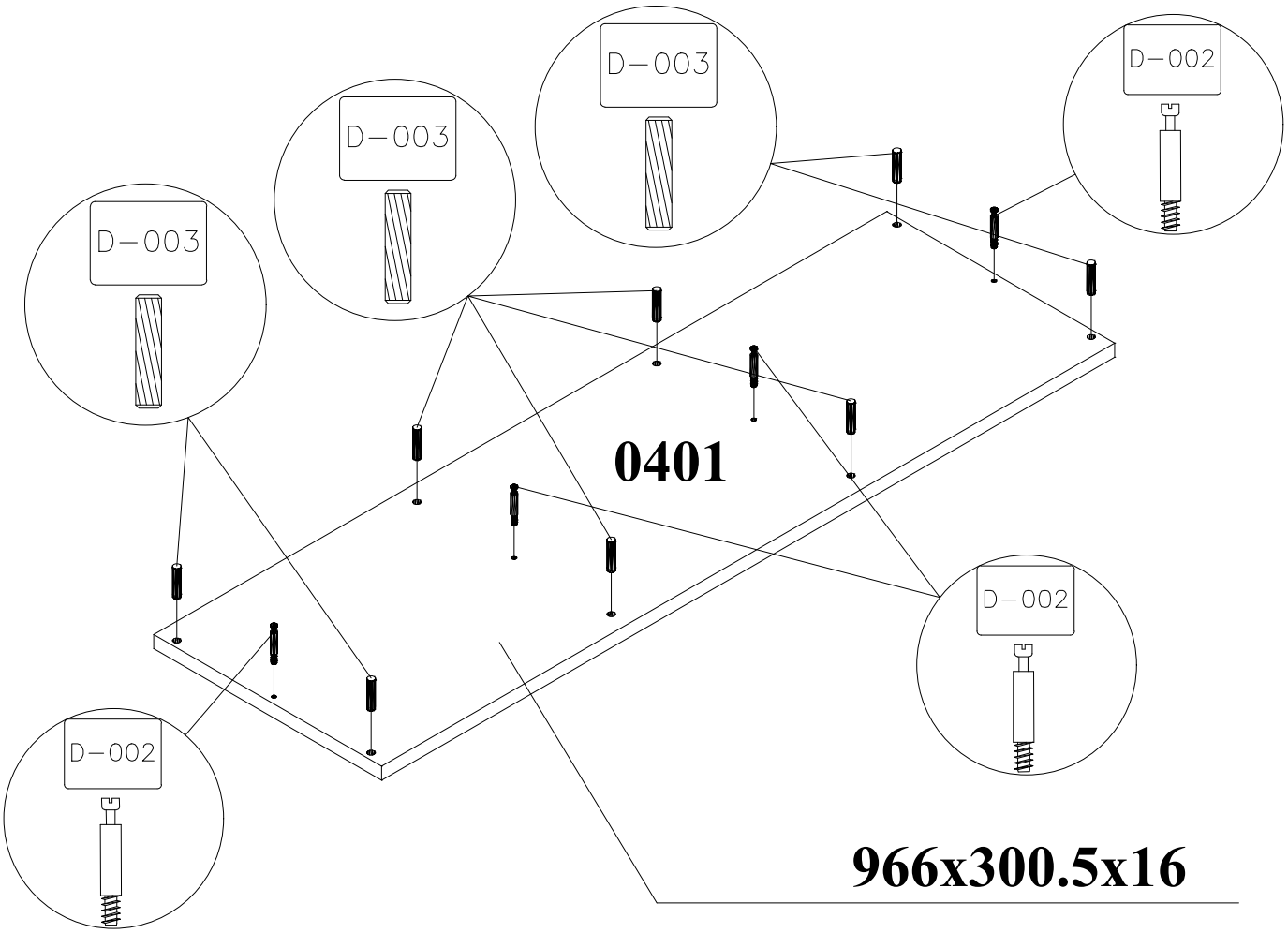
D-003
D-003
D-003
D-002
0401
D-002
D-002
966x300.5x16

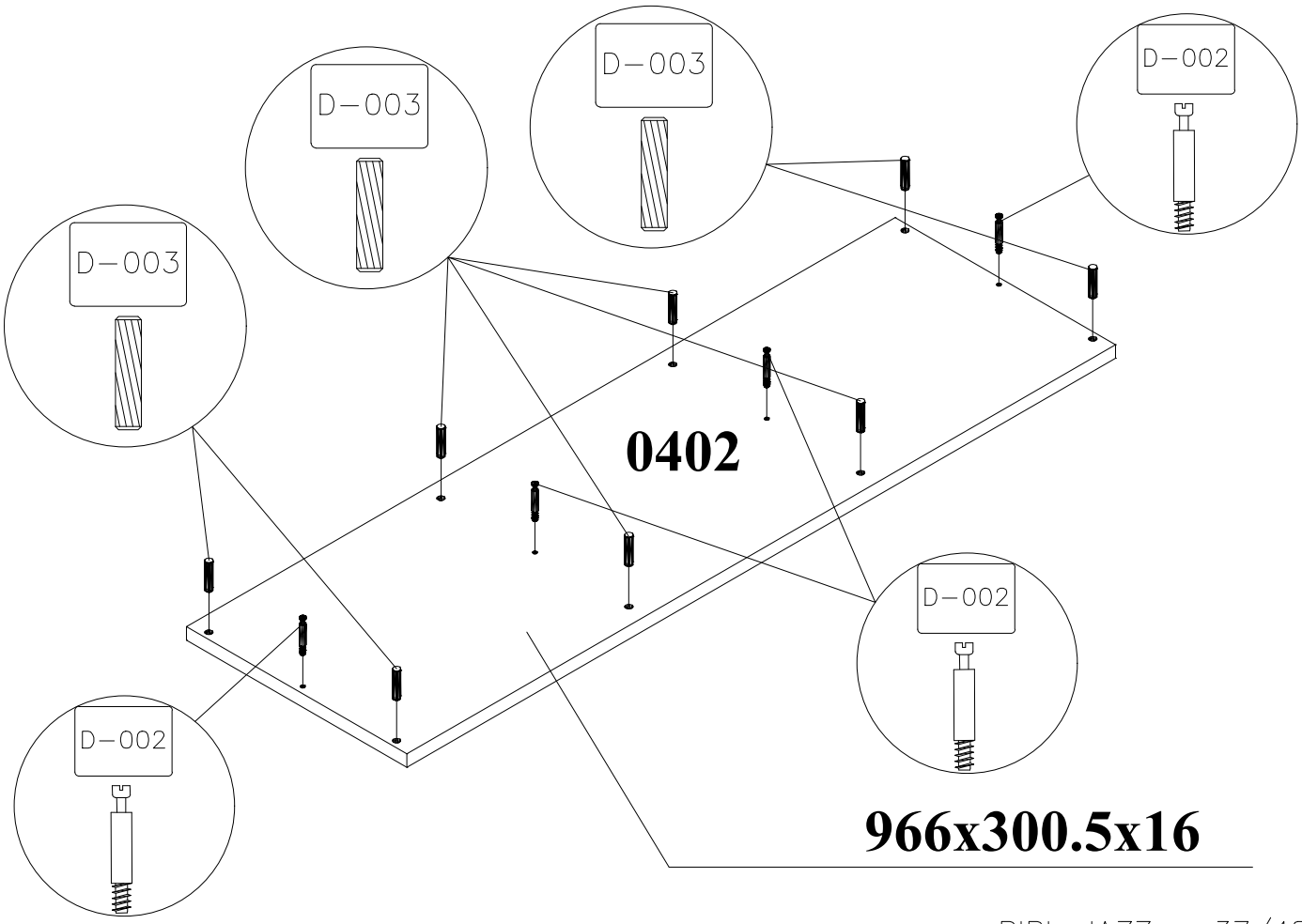
D-003
D-003
D-003
D-002
0402
D-002
D-002
966x300.5x16

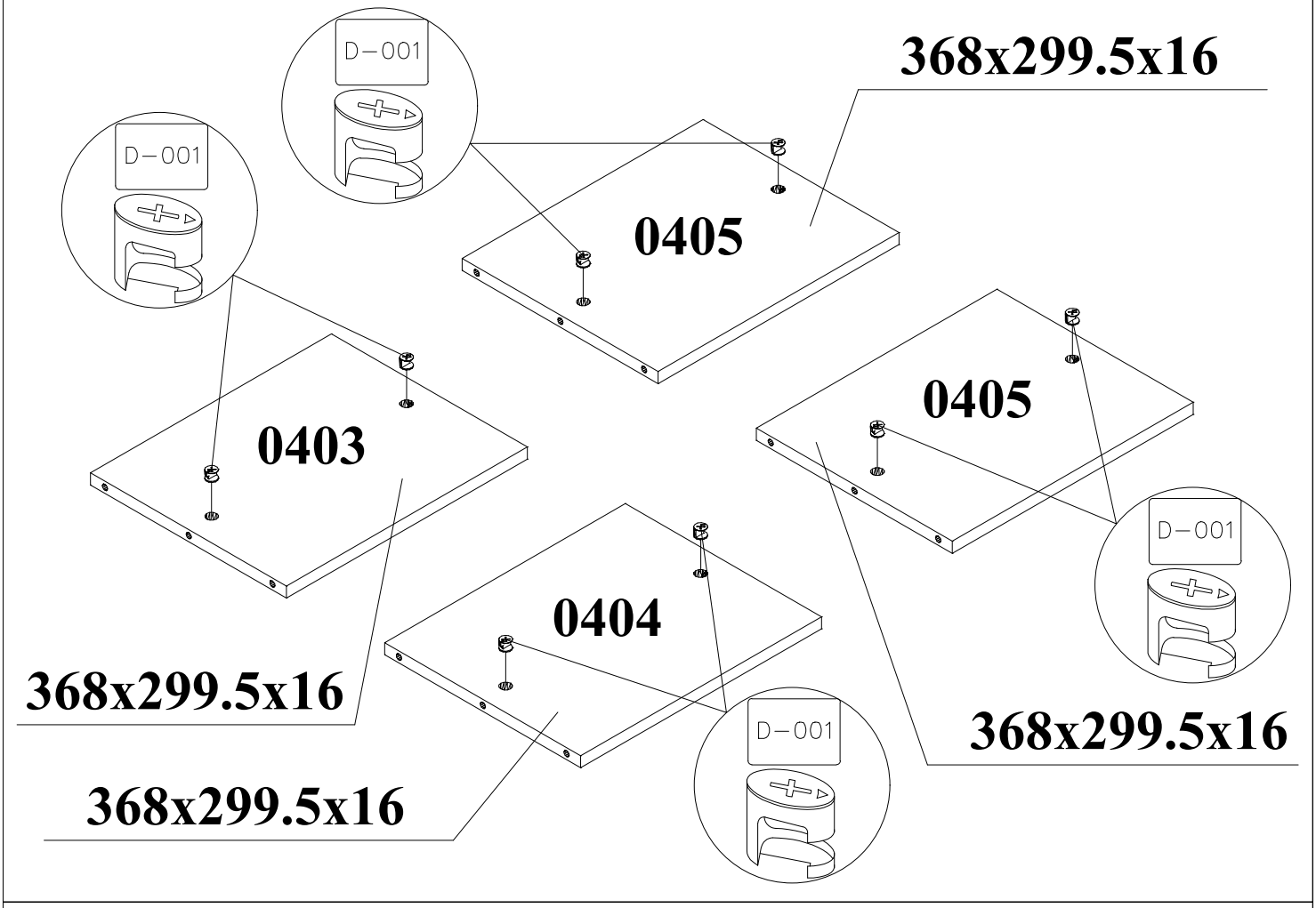
D-001
368x299.5x16
D-001
0405
0403
0405
D-001
0404
368x299.5x16
D-001
368x299.5x16
368x299.5x16

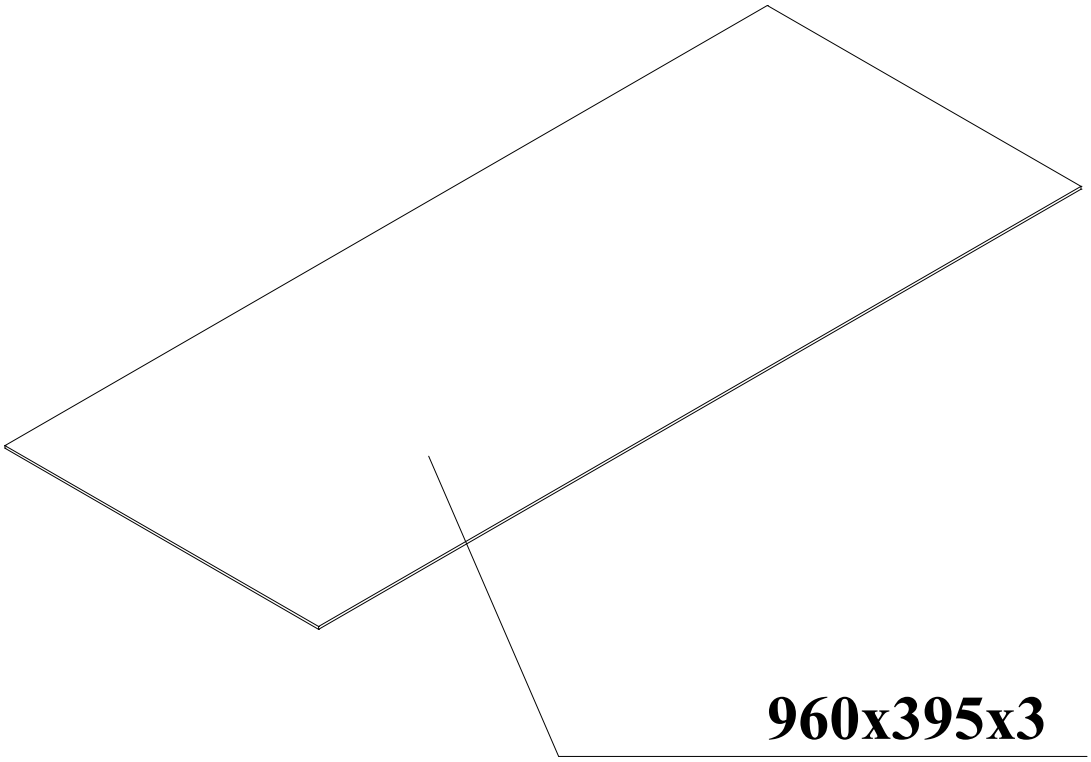
960x395x3

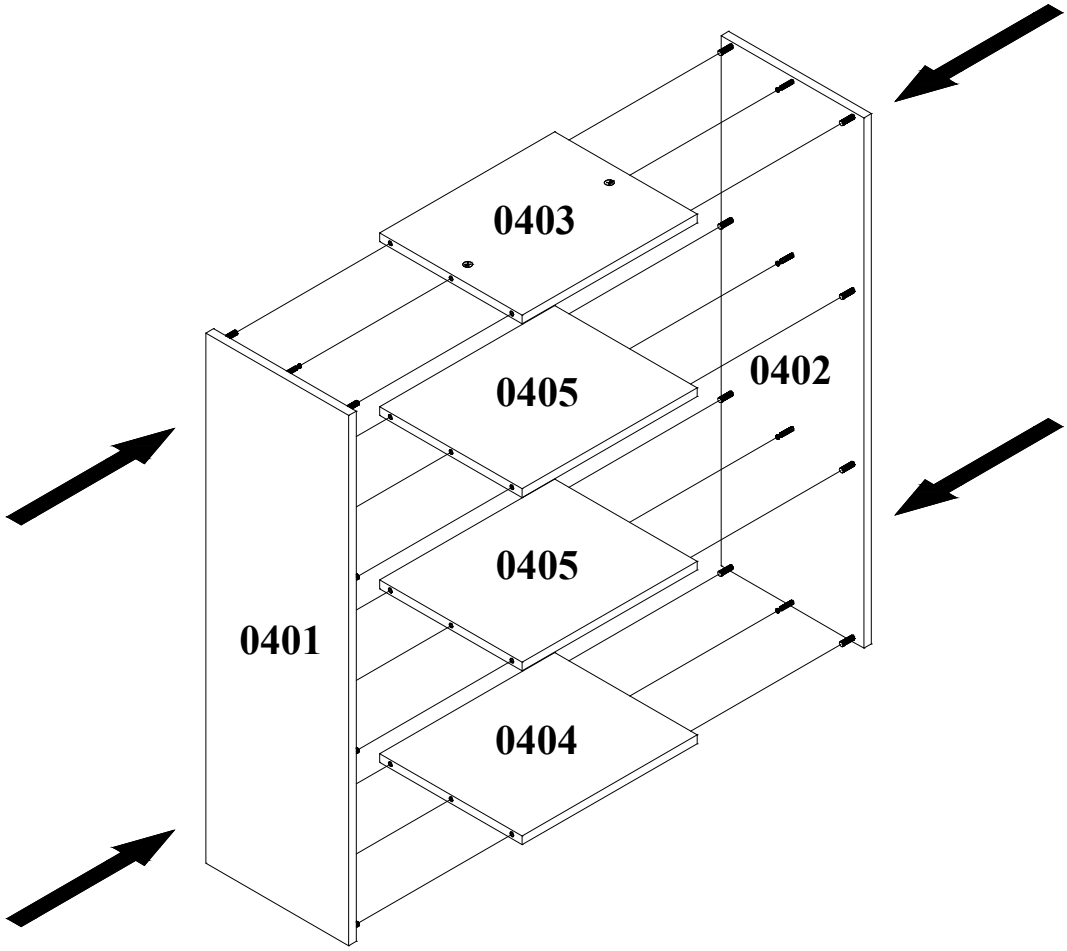
0403
0405
0402
0405
0401
0404

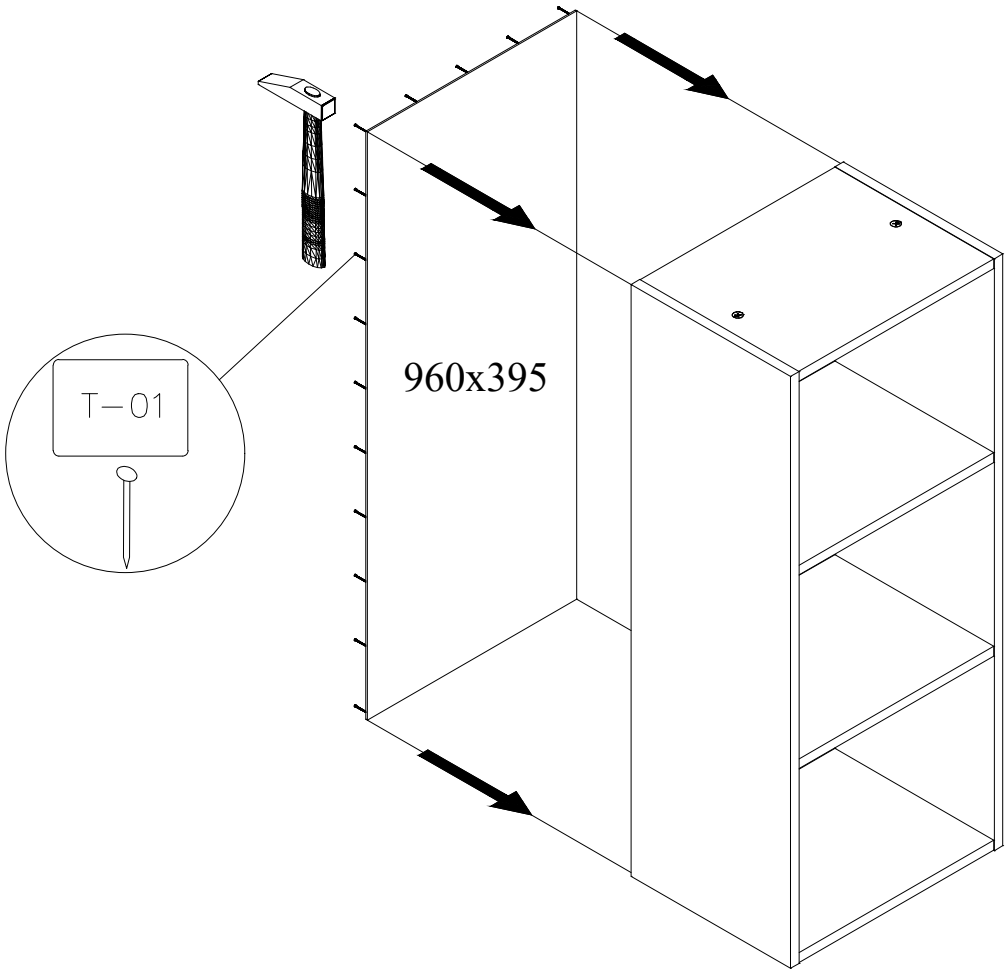
T-01
960x395

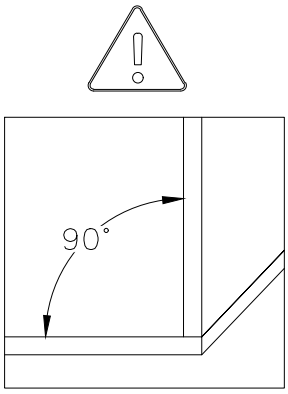
90°

Assembly instructions
Instructiuni de montaj

PRODUCT : LIVING JAZZ – SHELF UNIT
PRODUS: BIBL JAZZ – CORP RABATARE

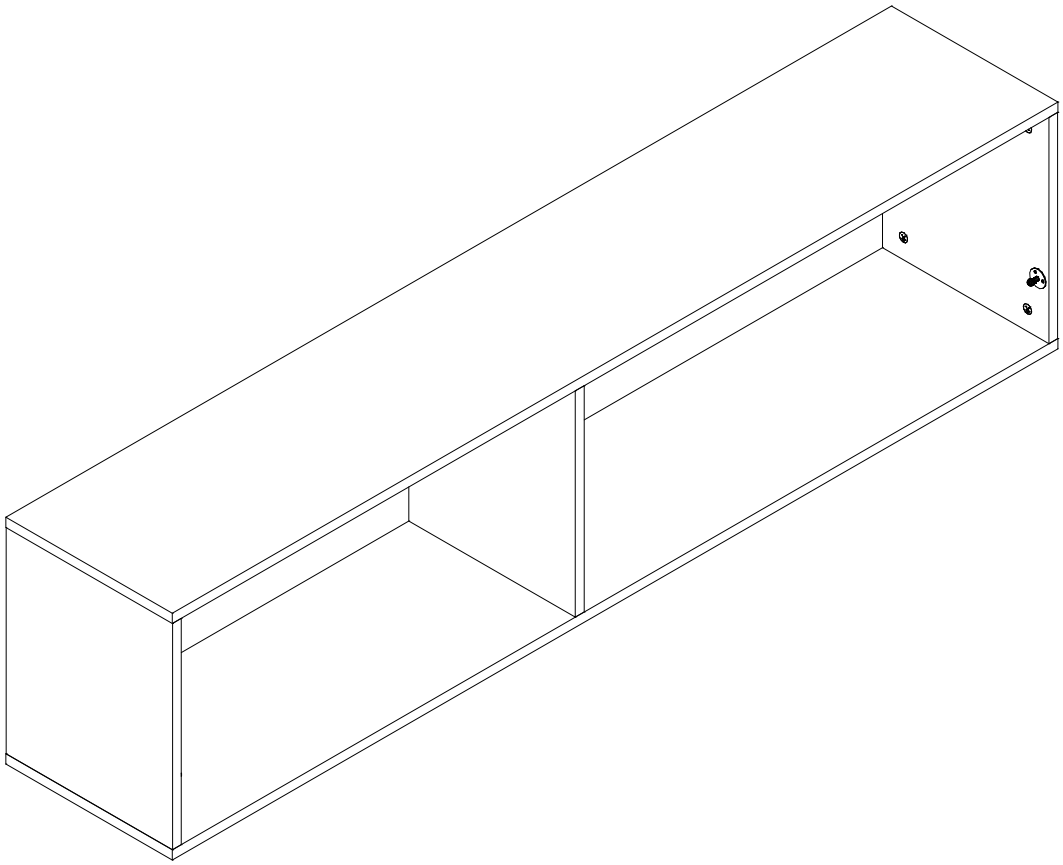

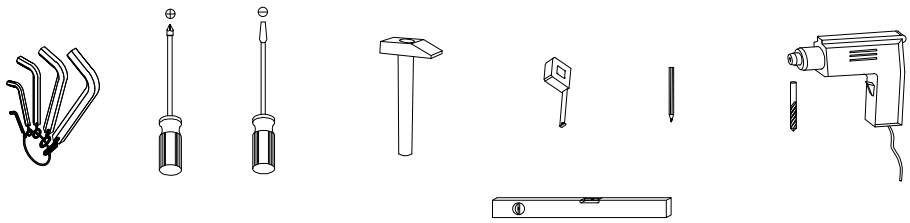

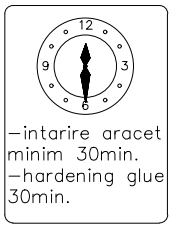

BIBL JAZZ – 40/48

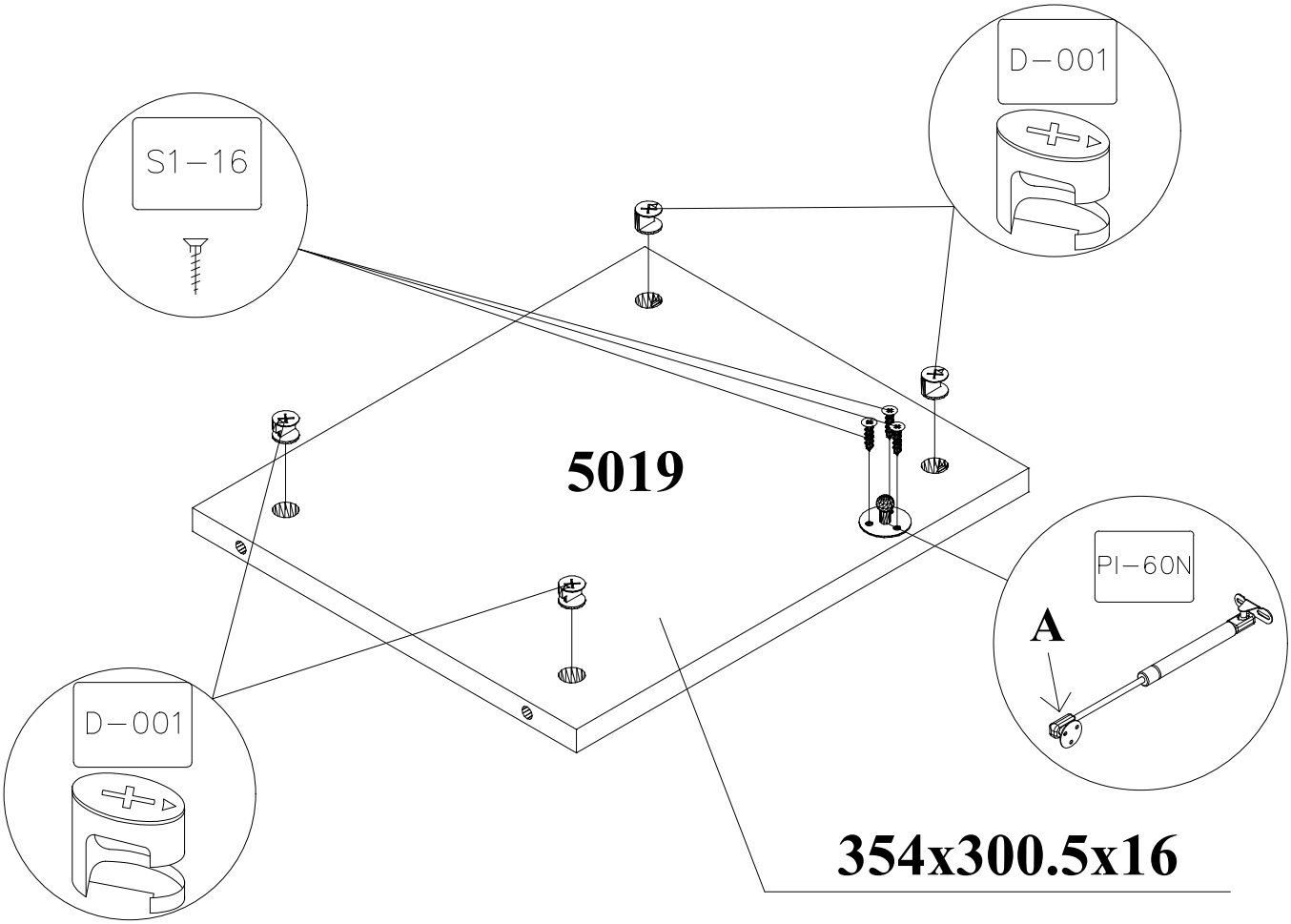
D-001
S1-16
5019
PI-60N
A
D-001
354x300.5x16

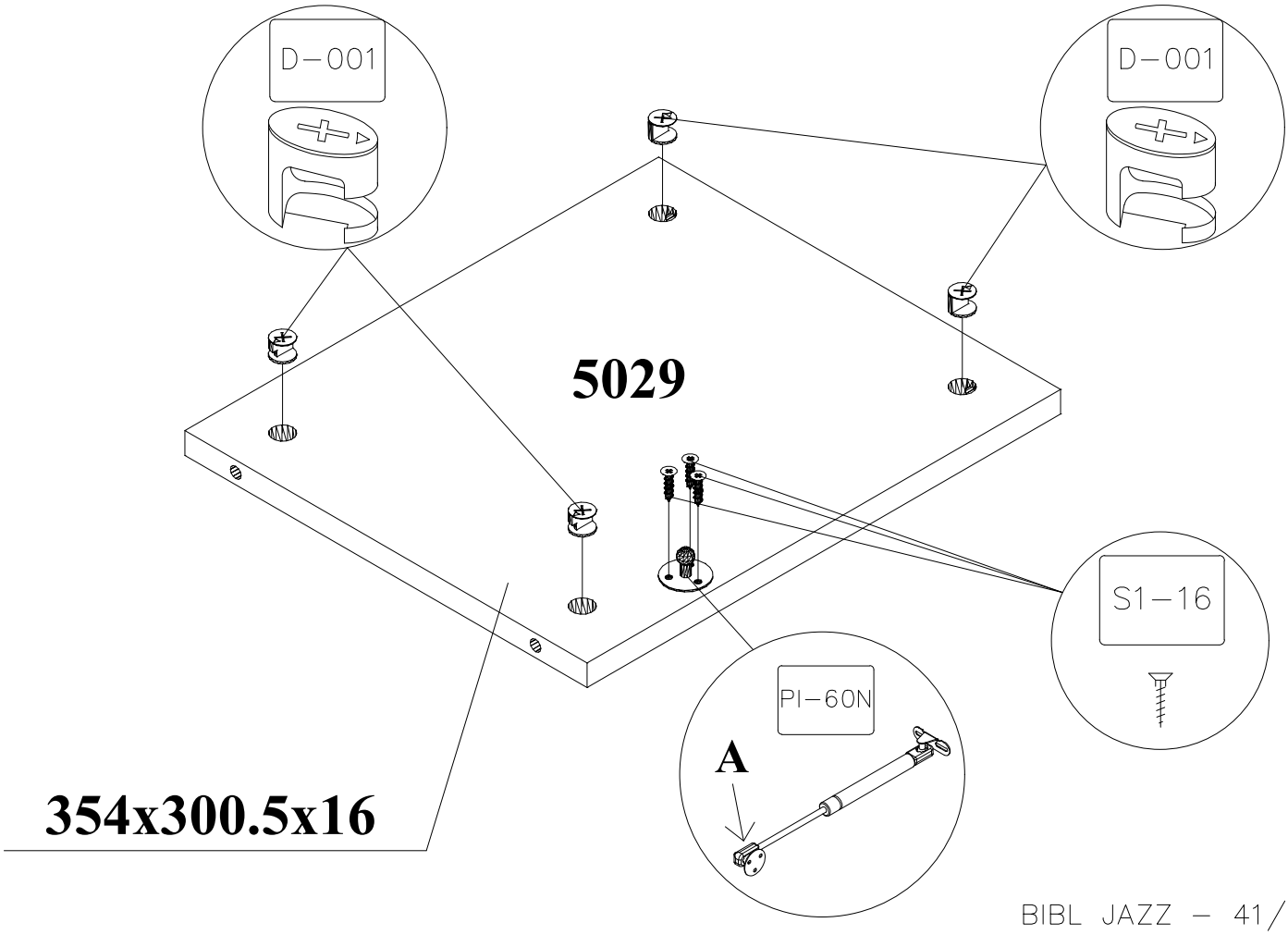
D-001
D-001
5029
S1-16
PI-60N
A
354x300.5x16

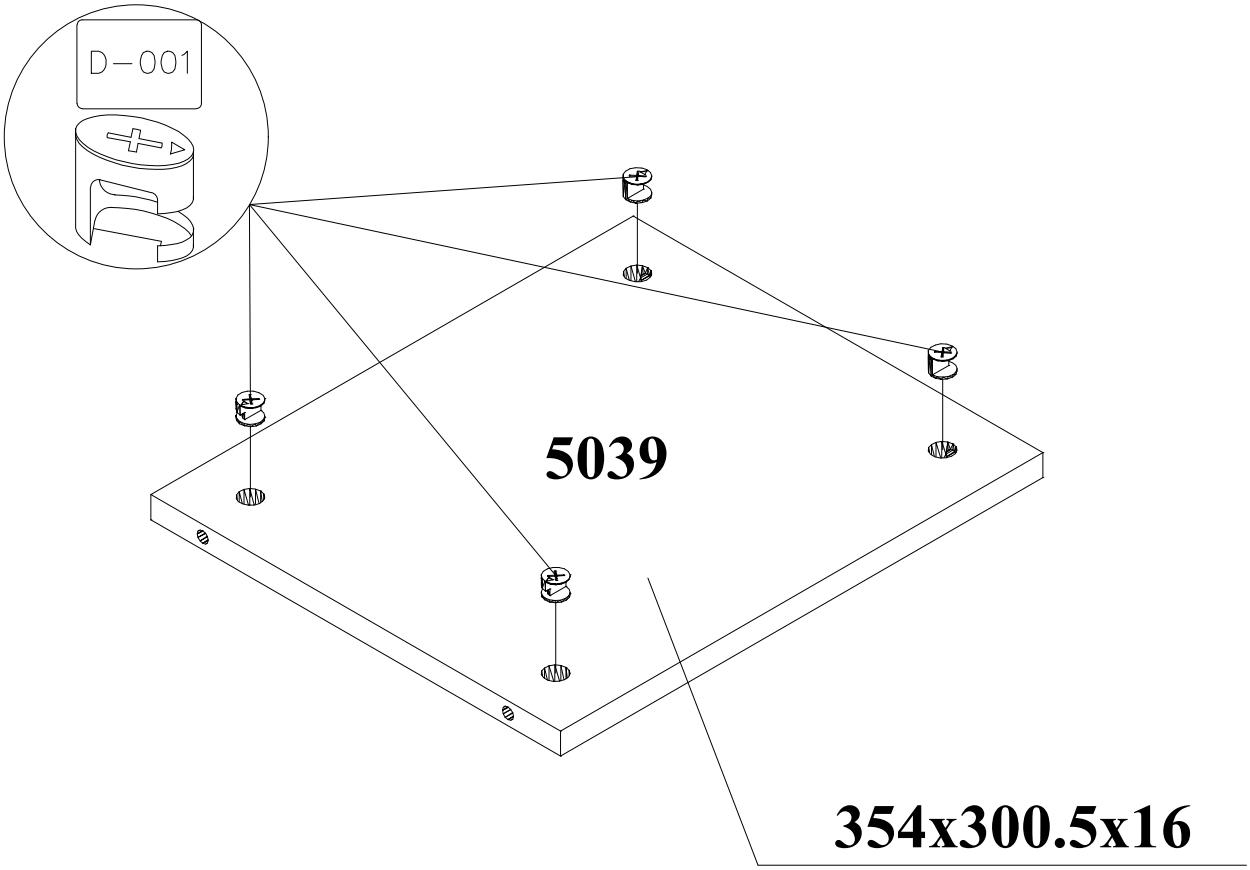
D-001
5039
354x300.5x16

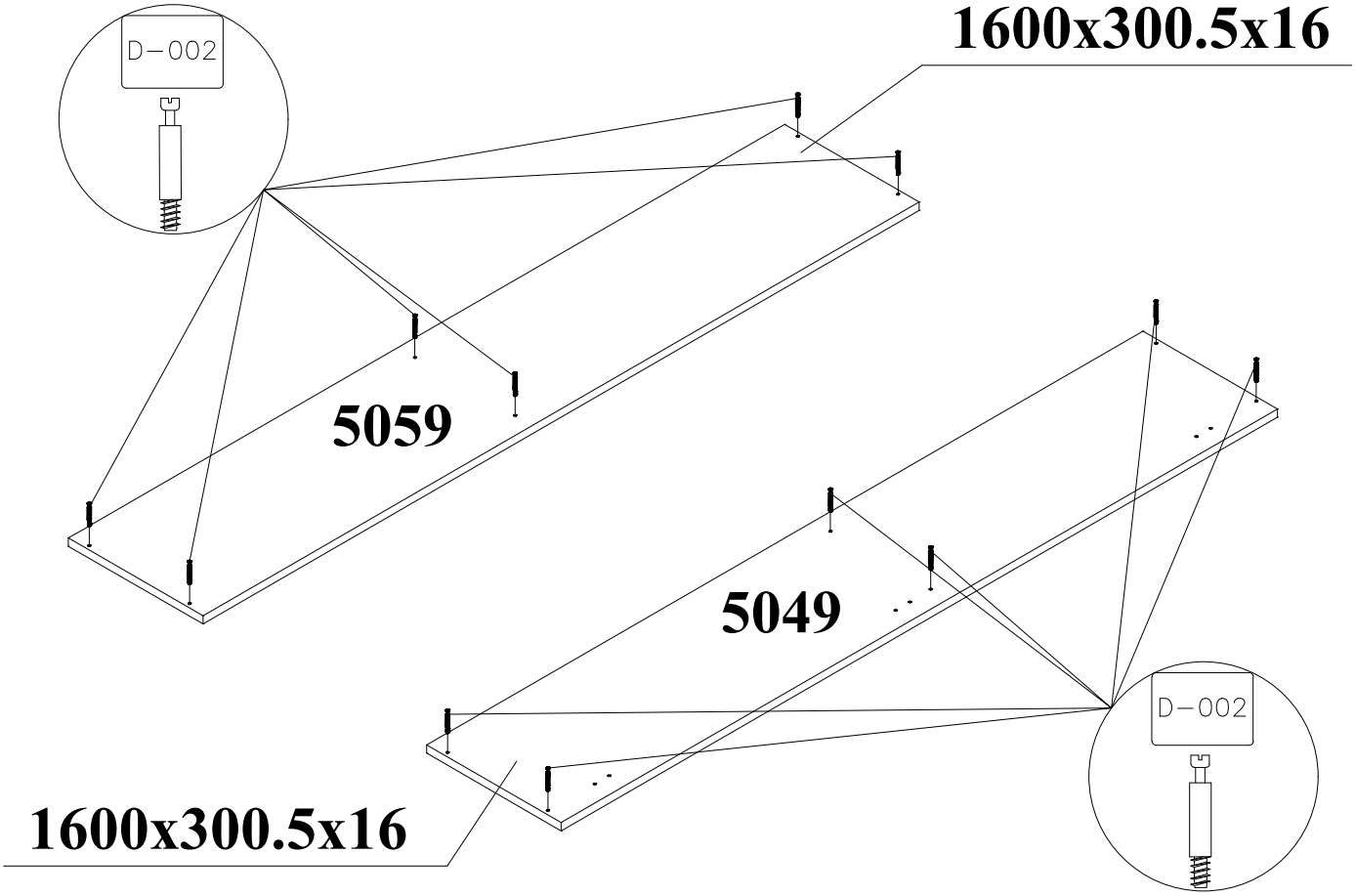
D-002
1600x300.5x16
5059
5049
D-002
1600x300.5x16

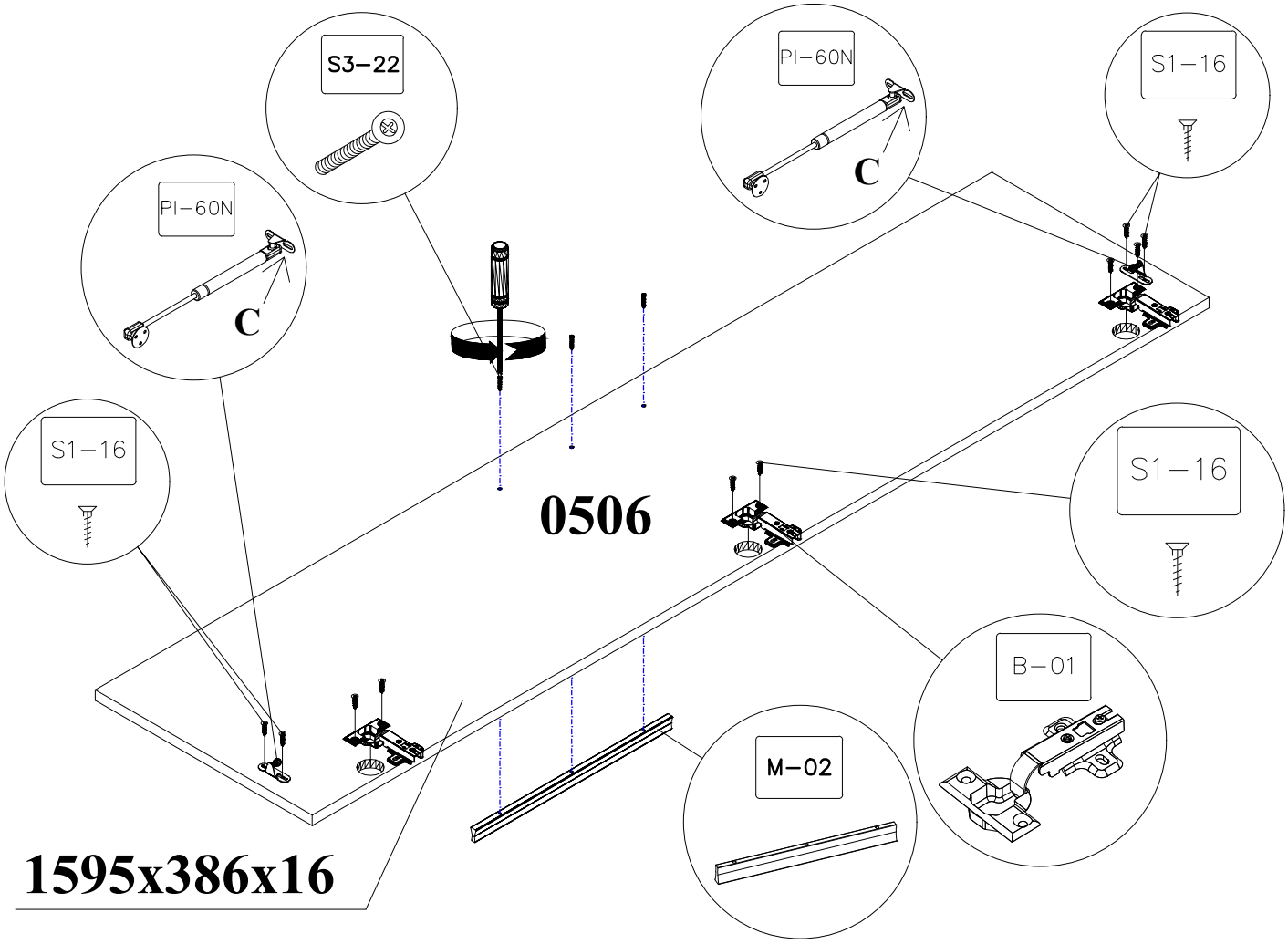
S3–22
PI–60N
C
PI–60N
C
S1–16
S1–16
S1–16
0506
B–01
M–02
1595x386x16

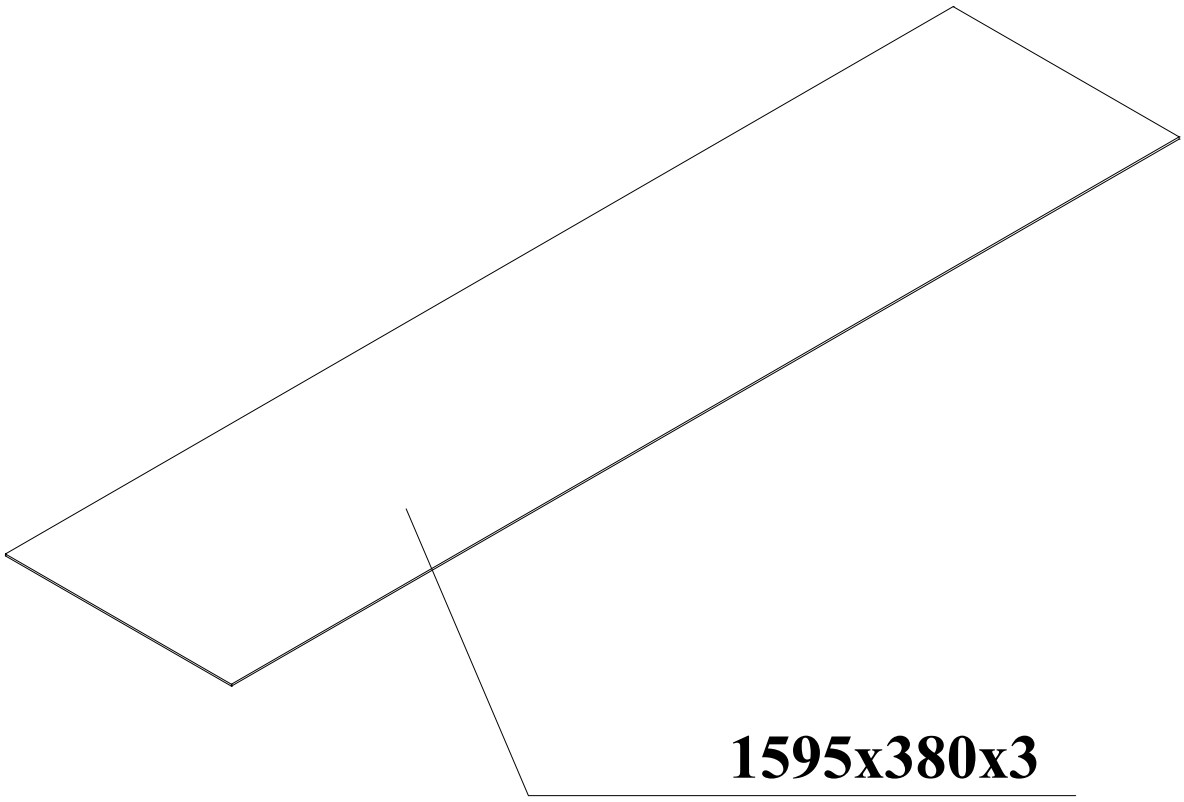
1595x380x3

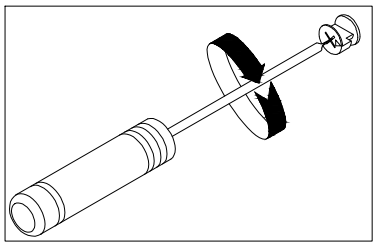

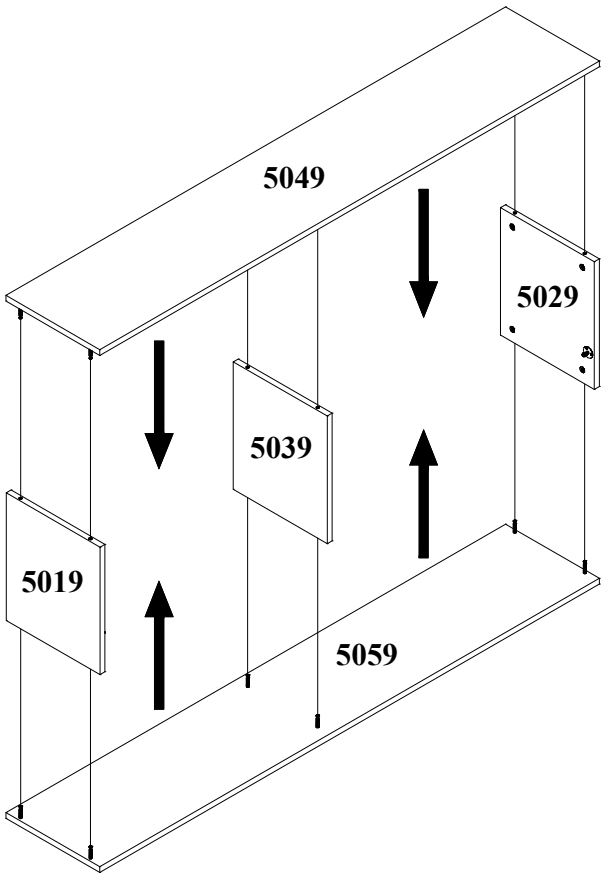
5049
5029
5039
5019
5059

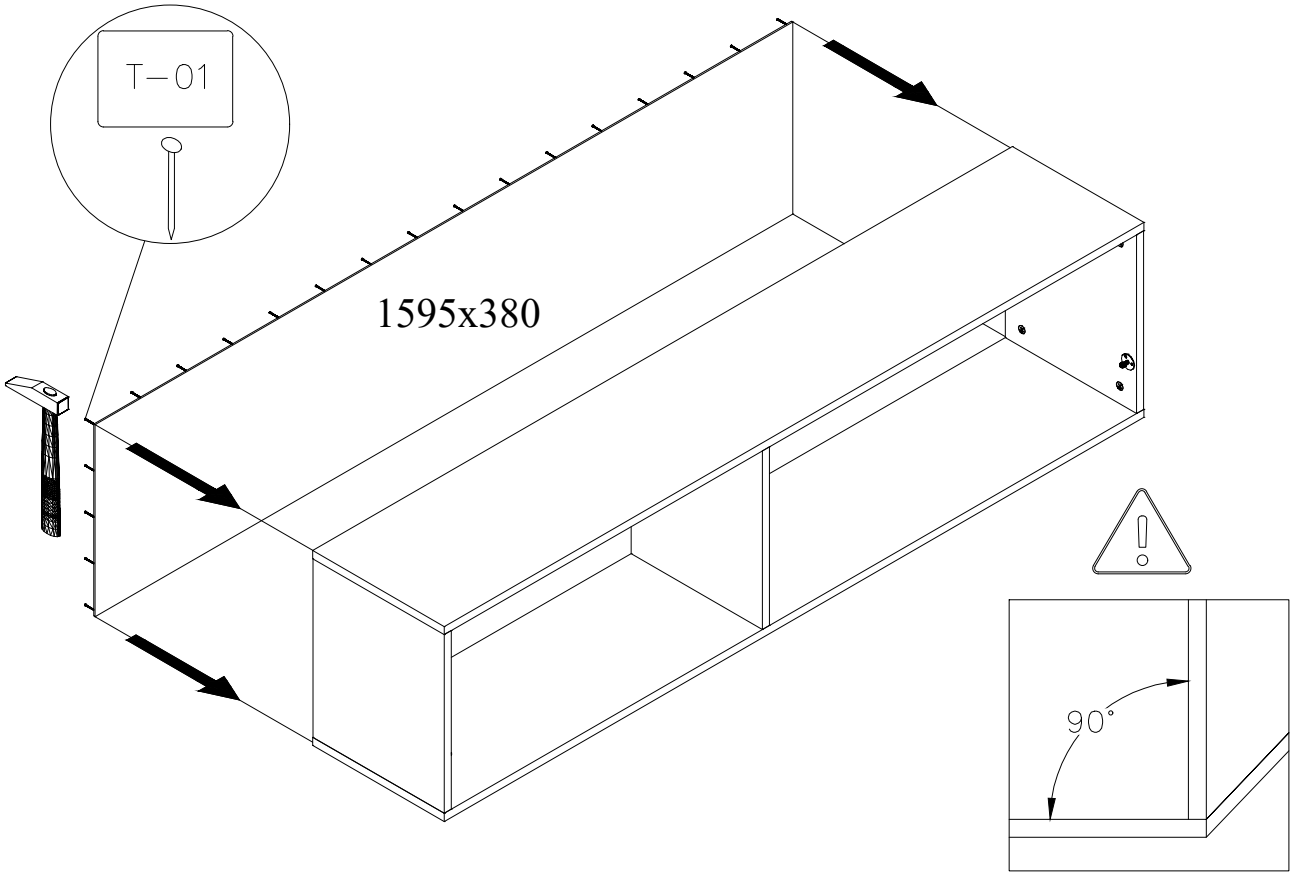
T-01
1595x380
90°

Assembly instructions
Instructiuni de montaj

PRODUCT : UNIT JAZZ – ASSEMBLING
PRODUS: UNIT JAZZ – ASAMBLARE CORPURI

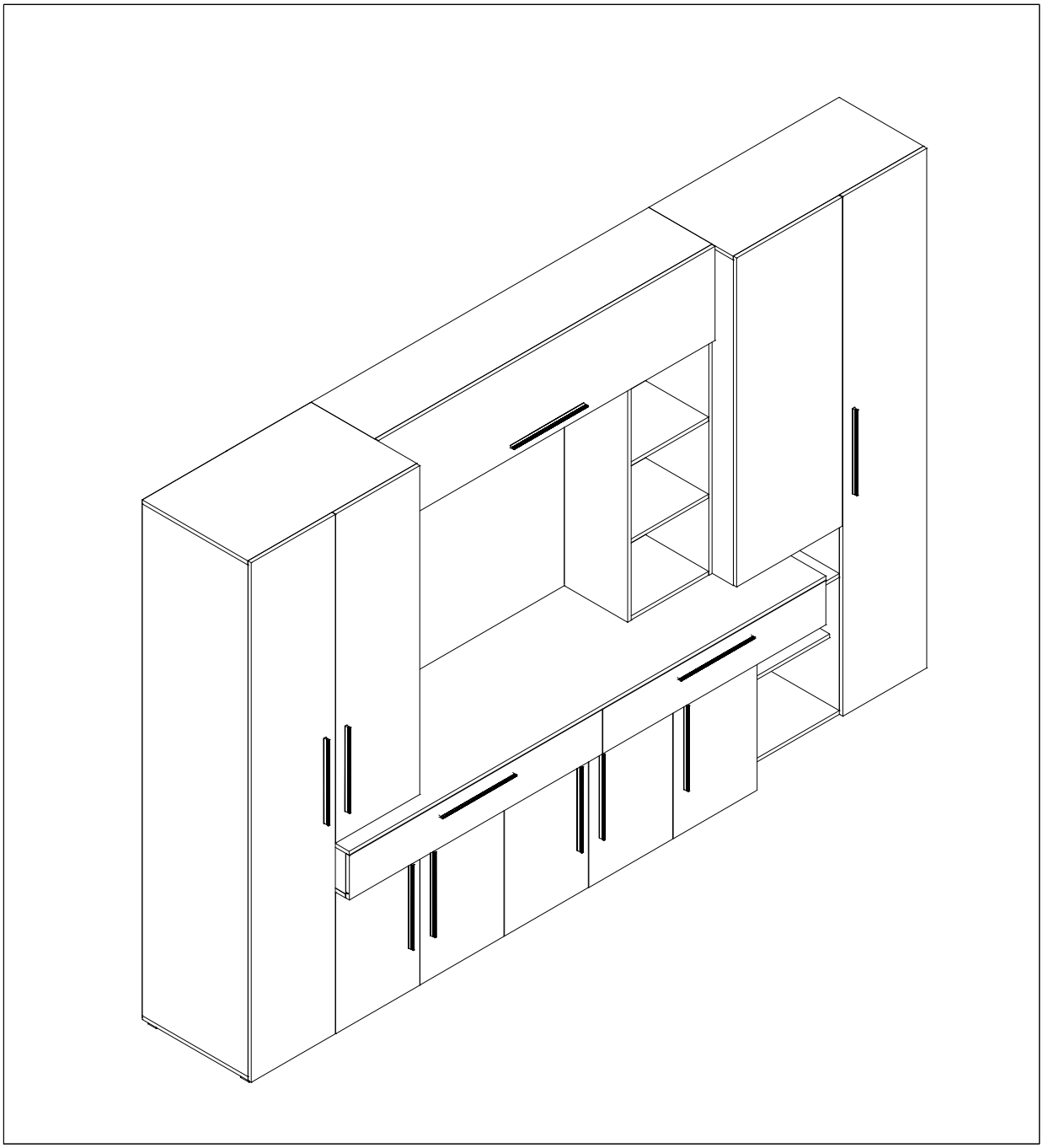

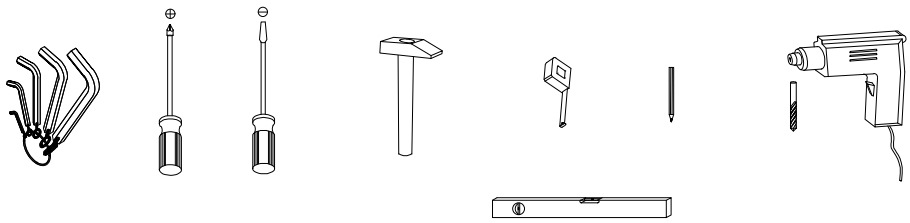

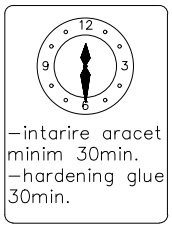

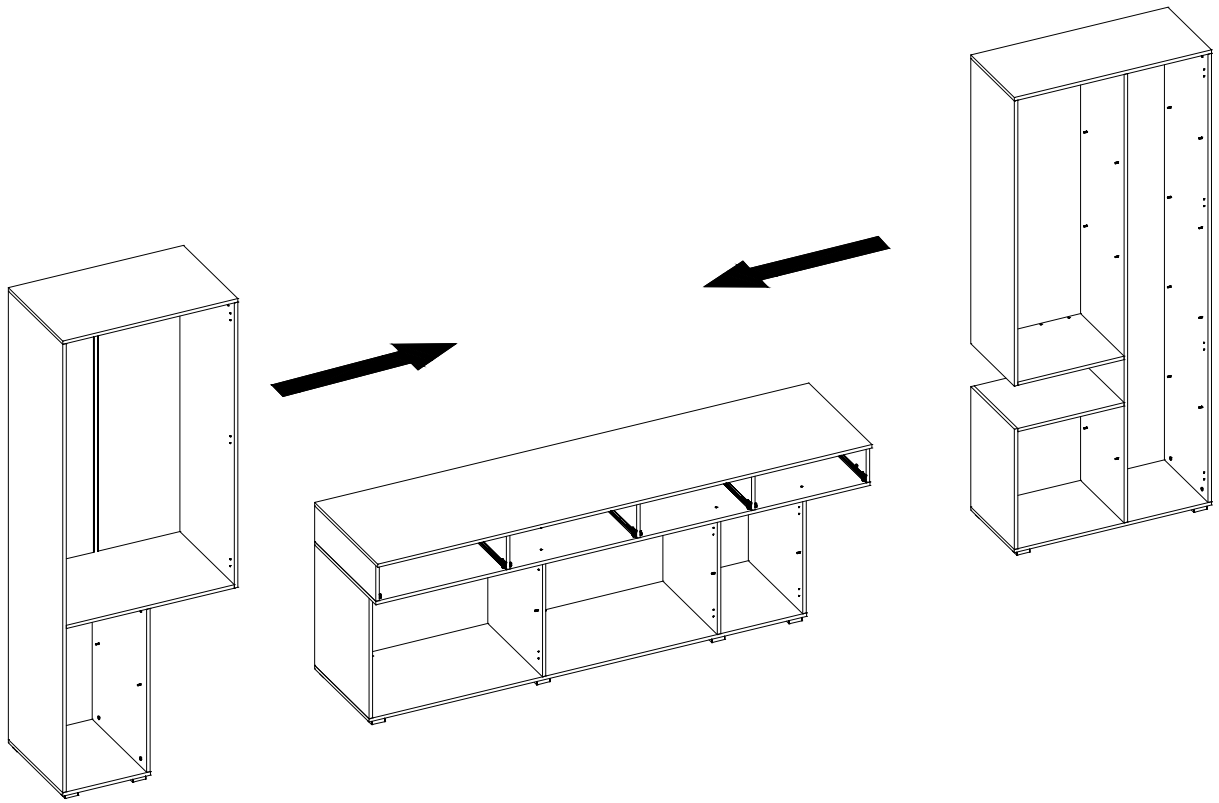

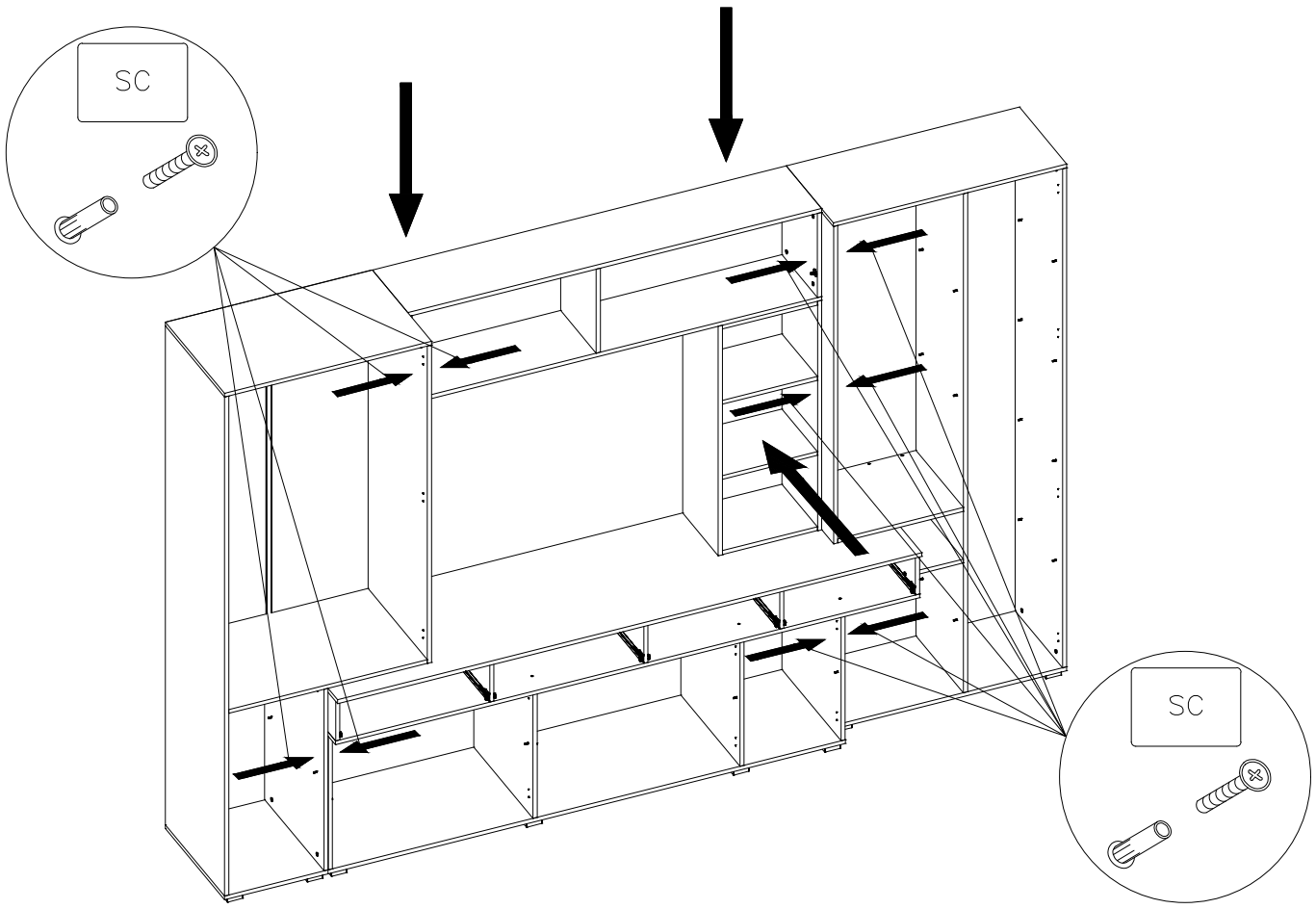
SC
SC

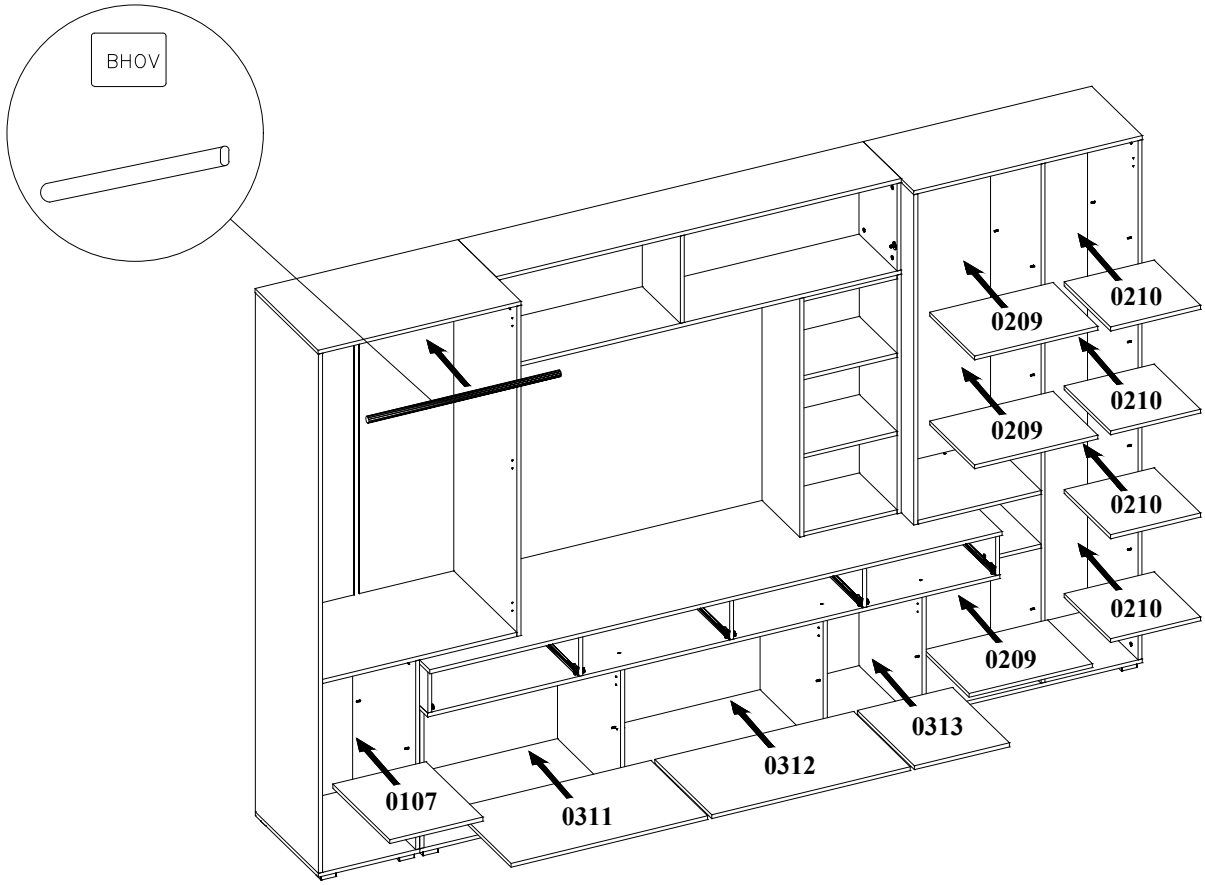
BHOV
0210
0209
0210
0209
0210
0210
0209
0313
0312
0107
0311

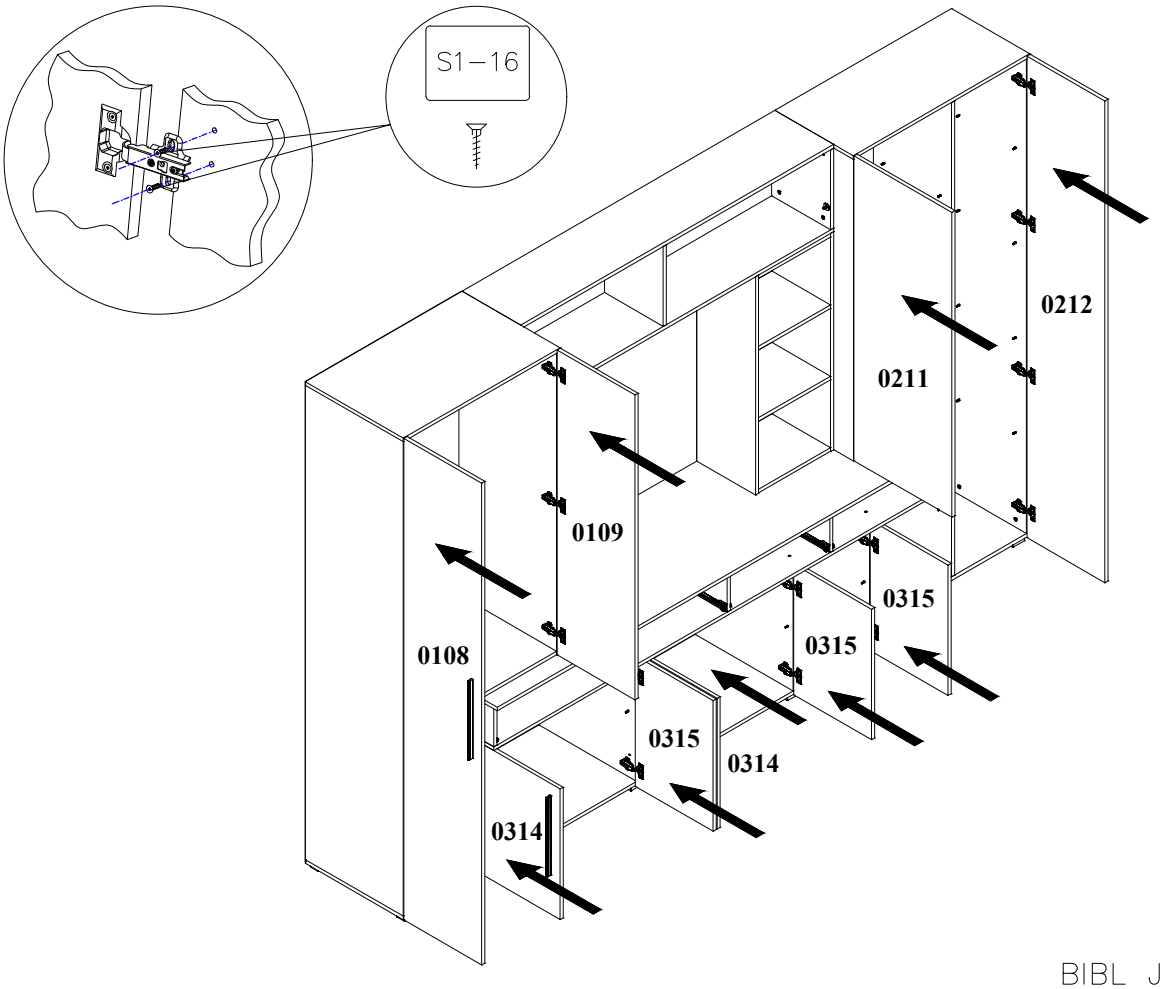
S1–16
0212
0211
0109
0315
0315
0108
0315
0314
0314

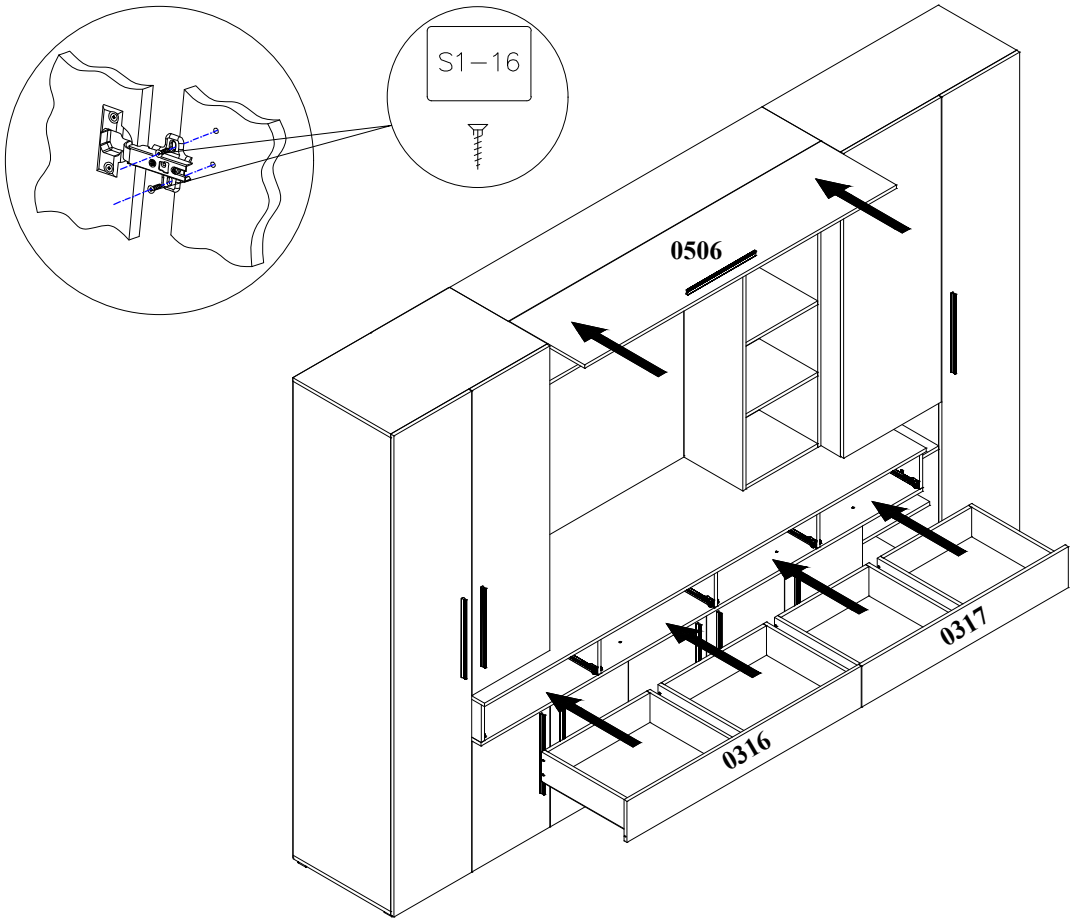
S1-16
0506
0317
0316

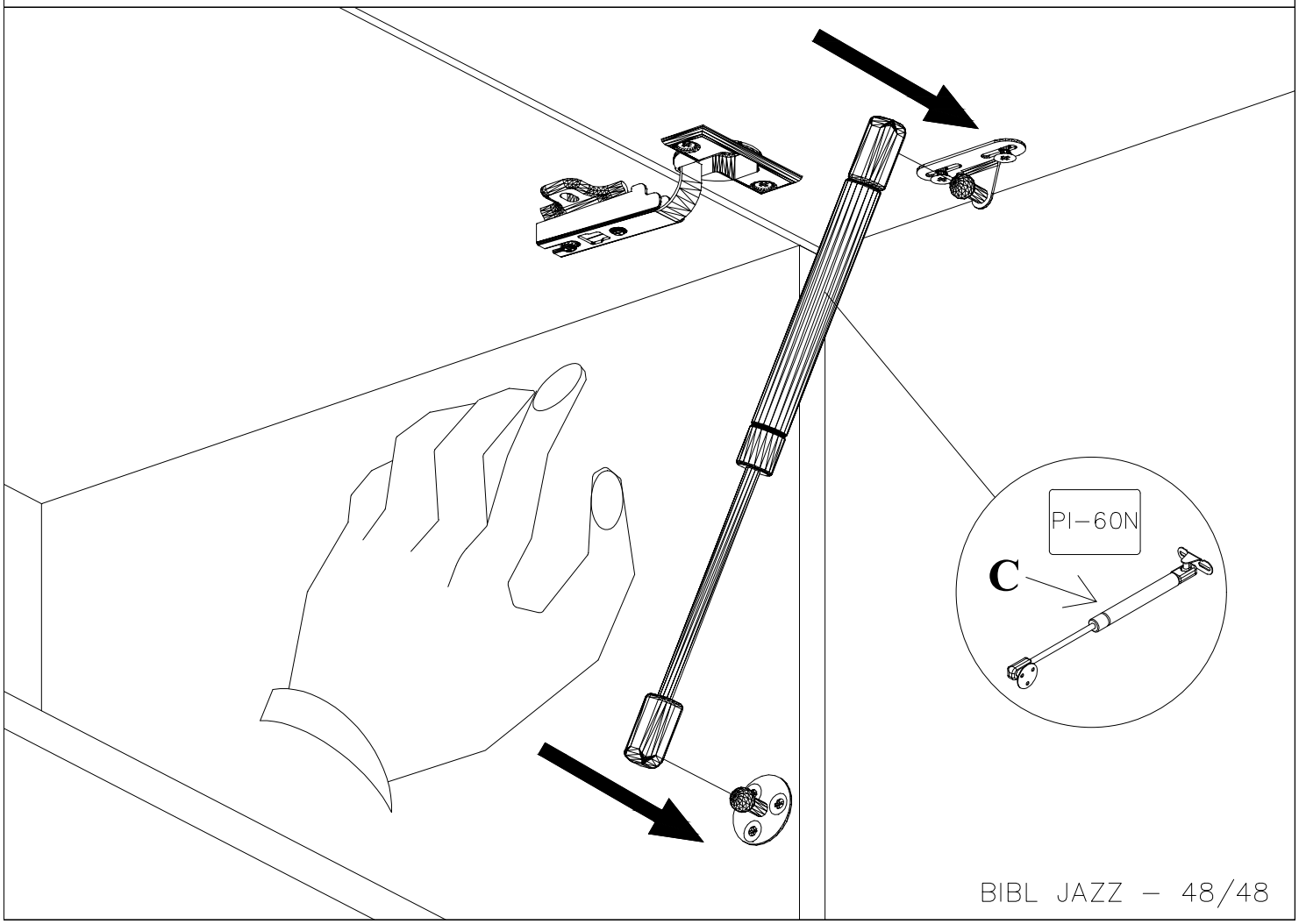
PI-60N
C